# SUBMITTAL DATA SHEET

Product Name: Wired Controller
Model Number: KJR-120N(X6W)

## Wired Controller

Location: _____
Engineer: _____
Submitted to: _____
Submitted by: _____
Reference: _____

Approval: _____
Date: _____
Construction: _____
Unit #: _____
Drawing #: _____

## SPECS

| | | |
|---|---|---|
| **Code** | 17317100A42535 | |
| **Model** | KJR-120N(X6W) | |
| | | |
| **Power supply** | V | 12 VDC |
| **Product size (HxWxD)** | inch | 4-3/4 x 4-3/4 x 7/8 |
| | mm | 120 x 120 x 20.6 |
| **Net weight** | lbs | 0.46 |
| | kg | 0.21 |
| **Ambient temperature** | °F | 32-110 |
| | °C | 0-43 |
| **Ambient humidity** | RH | 40%-90% |
| **Material** | Front panel | PC/ABS |
| | Back cover | PC/ABS |
| | | |




## Dimension

**unit：inch (mm)**

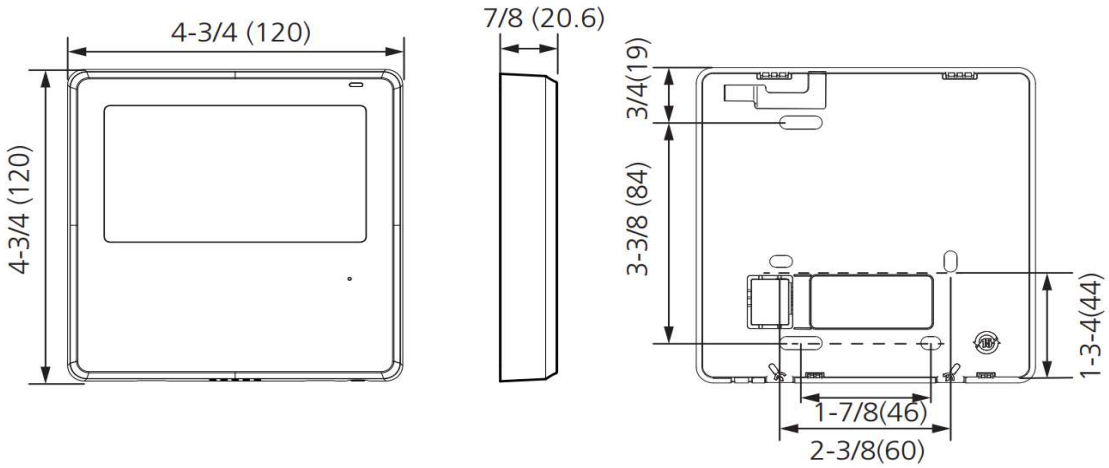

## Display

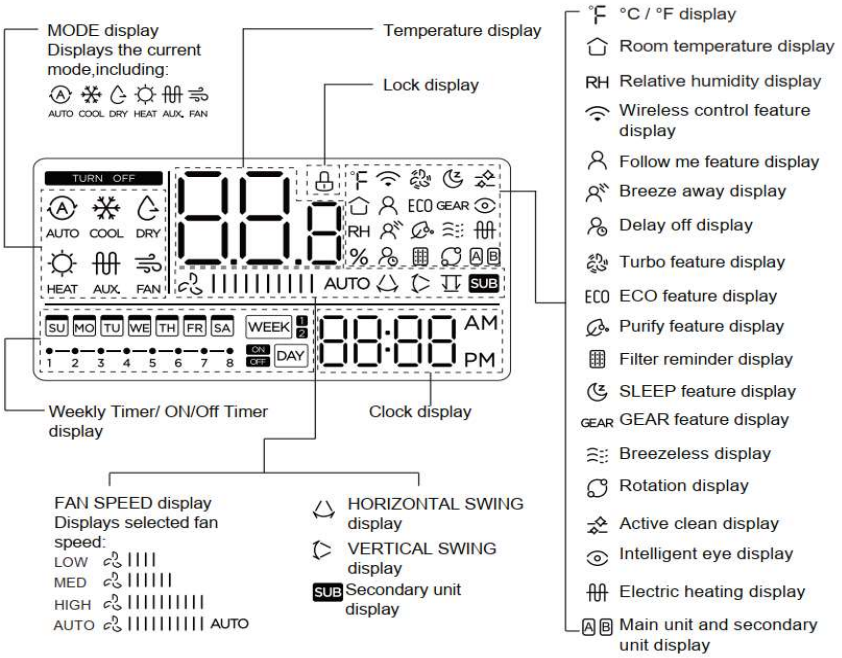


## Button

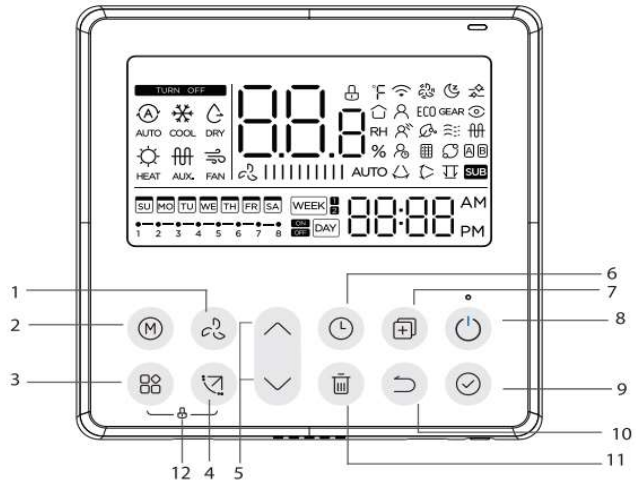


1 FAN SPEED button
2 MODE button
3 FUNC. button
4 SWING button
5 ADJUST button
6 TIMER button
7 COPY button
8 POWER button
9 CONFIRM button
10 BACK button
11 DAY OFF/DELAY button
12 CHILD LOCK button

## Feature and function



### Feature:

- LCD display.
- Malfunction code display: it can display the error code, helpful for service.
- 4-way wire layout design, no raised part at backside, more convenient to place the wires and install the device.
- Room temperature display.
- Weekly Timer.

### Function:

- Mode: Choose Auto-Cool-Dry-Heat -Fan
- Fan speed: Auto/Low/Med/High speed
- Swing (on some models)
- Timer ON/OFF
- Temp setting
- Weekly timer
- Follow me
- Turbo
- 24-hour System
- 12-hour System
- Auto-restart
- Individual louver control (on some models)
- Automatic airflow test
- Rotation & Back-up
- Dual Control
- Group Control
- Child Lock
- LCD display
- Clock

## Compatibility chart

| | All Easy Pro | INFINI | Console | 1-way cassette | 4-way cassette | Ceiling&Floor | Slim duct | 2nd Gen. AHU | 3rd Gen. AHU | Wall Mounted AHU | Pancake | A-Coil |
|---|---|---|---|---|---|---|---|---|---|---|---|---|
| | Yes | Yes | Yes | Yes | Yes | Yes | Yes | Yes | Yes | Yes | Yes | No |