Installation Manual
Inverter Heat Pump

EVOX XTREME HEAT

For 18,000 - 60,000 BTU Systems



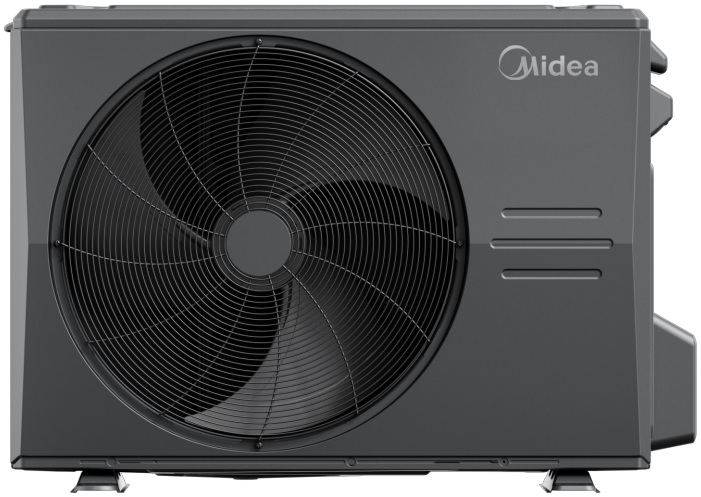

NOTE

Read the entire instruction manual before starting the installation. Images are for illustration purposes only. Actual models may differ slightly.

Units Covered In This Manual

SYSTEM TONS	BTUH	VOLTAGE/ PHASE	OUTDOOR MODEL
1.5	18,000	208/230-1	MO1HE-H18B-2A
2.0	24,000	208/230-1	MO1HE-H24B-2A
2.5	30,000	208/230-1	MO1HE-H30B-2A
3.0	36,000	208/230-1	MO1HE-H36B-2A
3.0	36,000	208/230-1	MO1SE-H36B-2A
3.5	42,000	208/230-1	MO1HE-H42B-2A
4.0	48,000	208/230-1	MO1HE-H48B-2A
4.0	48,000	208/230-1	MO1SE-H48B-2A
5.0	60,000	208/230-1	MO1HE-H60B-2A

AHRI CERTIFIED™ www.ahridirectory.org

C ETL LISTED US

Manufacturer reserves the right to change, at any time, specifications and designs without notice and without obligations.

Table of Contents

Safety Considerations **3**
Table S-1: Minimum Room Area Requirements 5
Table S-2: Approved Matchups 5
Table S-3: Explanation of symbols displayed on the indoor unit or outdoor unit 10
Installation Accessories **10**
Table A-1: Included Accessories 10
Table A-2: Optional Accesssories 10
Table A-3: Suction and Liquid Line Flare to Braze Adapter Sizes 11
Dimensions **11**
Table D-1: Dimensions 11
Figure D-1: Unit Dimensions 11
Clearances **12**
Fig. C-1: Clearance Dimensions 12
Fig. C-2: Clearance for Annual Snowfall 12
Fig. C-3: Clearances for Multiple Units 12
Installation Requirements **13**
Installation **13**
Step 1 - Check Equipment 13
Step 2 - Mount Unit 13
Fig. 2-1: High Wind Installation 13
Step 3 - Condensate Drain Installation 14
Fig. 3-1: Drain Joint Assembly 14
Table 3-1: Operating Ambient Temperatures 14
Step 4 - Refrigerant Piping Connections 15
Table 4-1: Piping Sizes 15
Fig. 4-1: Correct Pipe Cutting 16
Fig. 4-2: Reamer Tool 16
Fig. 4-3: Copper pipe and flare nut 16
Fig. 4-4: Flare Form 16
Fig. 4-5: Flare Shape 16
Table 4-2: Flare Dimensions/Tightening Torque 16
Fig. 4-6: Align the center of the two pipes 17
Fig. 4-7: Torque wrench with backup wrench 17
Fig. 4-8: Bend the Tubing 17
Step 5 - Power Wiring Connections 18
Fig. 5-1: Remove Electrical Cover 18
Fig. 5-2: Field Wiring Conduit Location 18
Fig. 5-3: High Voltage Power Connections 19
Table 5-1: ODU 485 + 24 V Connection Guide 19
Step 6 - Communication Wiring Connections - Dip Switch Configuration 20
Table 6-1: Communication Wiring Sizes 20
Table 6-2: Wiring Color Guide 20
Table 6-3: Outdoor Unit DIP Switch Settings 20
Scenario 1: EVOX Heat Pump and Air Handler 3rd Party 24 V Thermostat 21
Fig. 6-1: Scenario 1 Wiring Diagram and Dip Switch Settings 21
Scenario 2: EVOX Heat Pump, Air Handler, and RS485 Communication 21
Fig. 6-2: Scenario 2 Wiring Diagram and Dip Switch Settings 21
Scenario 3: Self-Adapt Mode with 3rd Party Equipment 22
Fig. 6-3: Scenario 3 Wiring Diagram and Dip Switch Settings 22
Table 6-4: Electrical Data 22
24 V Connection Diagrams 23
Table 6-5: Terminal Function 23
Fig. 6-4: Never Connect 24 V to S1-S2 23
Fig. 6-5: Wiring for 4H and 2C Thermostat 23
Fig. 6-6: Wiring for 3H and 2C Thermostat 23
Fig. 6-7: Wiring for 3H and 1C Thermostat 24
Fig. 6-8: Wiring for 2H and 2C Thermostat No Auxilary Heat 24
Fig. 6-9: Wiring for 3H and 2C Thermostat 24
Fig. 6-10: Wiring for 2H and 1C Thermostat 24
Fig. 6-11: Wiring for 1H and 1C Thermostat 24
Fig. 6-12: Wiring for 1H and 1C Thermostat 24
Step 7 - Air Evacuation 24
Fig. 7-1: Manifold Gauge Arrangement 25
Fig. 7-2: Service Valve 25
Table 7-1: Additional Refrigerant Formula 25
Start-Up **26**
Care and Maintenance **26**
Troubleshooting **26**
Appendix **27**
Outdoor Unit Diagnostic Guide 27
Table AP-1: Outdoor Unit Diagnostic Codes 27

Safety Considerations

⚠ WARNING

Hazards or unsafe practices that may result in severe personal injury or death.

⚠ CAUTION

Hazards or unsafe practices may result in minor personal injury or property damage. Carefully follow the precautions because they are essential to guarantee the safety of the equipment.

⚠ DANGER

Identifies the most serious hazards which will result in severe personal injury or death.

NOTE

A property-damage-only hazard, meaning no personal injury is possible.

IMPORTANT

Is used to highlight suggestions which will result in enhanced installation, reliability, or operation.

⚠ WARNING

State of California Proposition 65 Warning (US Only)
This product contains chemicals known to the State of California to cause cancer, birth defects, or other reproductive harm.

⚠ WARNING

Improper installation, adjustment, alteration, service, maintenance, or use can cause an explosion, fire, electrical shock, or other conditions that may cause death, personal injury, or property damage. Consult a qualified installer, service agency, distributor, or branch for information or assistance. The qualified installer or agency must use factory-authorized kits or accessories when modifying this product. Refer to the individual instructions packaged with kits or accessories when installing.

IMPORTANT

Follow all safety codes. Wear safety glasses, protective clothing, and work gloves. Have a fire extinguisher available. Read these instructions thoroughly and follow all warnings or cautions in the literature and labels attached to the unit. Consult local building codes and the current editions of the National Electrical Code (NEC) NFPA 70.

IMPORTANT

In Canada, refer to the current editions of the Canadian Electrical Code CSA C22.1. Follow the safety information.

⚠ WARNING

This appliance is not intended for use by persons (including children) with reduced physical, sensory or mental capabilities, or lack of experience and knowledge, unless they have been given supervision or instruction concerning use of the appliance by a person responsible for their safety. Children should be supervised to ensure that they do not play with the appliance.

⚠ WARNING

ELECTRICAL WARNINGS

- Only use the specified wire. If the wire is damaged, it must be replaced by the manufacturer, its service agent, or similarly qualified persons to avoid a hazard.
- The product must be properly grounded during installation, or electric shock may occur.
- For all electrical work, follow all local and national wiring standards, regulations, and the Installation Manual. Connect cables tightly, and clamp them securely to prevent external forces from damaging the terminal. Improper electrical connections can overheat, cause fire, and cause shock. All electrical connections must be made according to the Electrical Connection Diagram located on the panels of the indoor and outdoor units.
- All wiring must be properly arranged to ensure that the control board cover can close properly. If the control board cover is not closed properly, it can lead to corrosion and cause the connection points on the terminal to heat up, catch fire, or cause electrical shock.
- External disconnect shall be incorporated in installed wiring as per national and local codes.
- **Do not** share the electrical outlet with other appliances. Improper or insufficient power supply can cause fire or electric shock.
- If connecting power to installed wiring, an all-pole disconnect device that has at least 3 mm clearances in all poles, and have a leakage current that may exceed 10 mA, the residual current device (RCD) having a rated residual operating current not exceeding 30 mA, and disconnection must be incorporated into the installed wiring following the wiring rules.

ELECTRICAL SHOCK HAZARD



Failure to follow this warning could result in personal injury or death. Before installing, modifying, or servicing the system, the main electrical disconnect switch must be in the OFF position. There may be more than one disconnect switch. Lock out and tag the switch with a suitable warning label.

⚠ WARNING

EXPLOSION HAZARD



Failure to follow this warning could result in death, serious personal injury, and/or property damage.
Never use air or gases containing oxygen for leak testing or operating refrigerant compressors. Pressurized mixtures of air or gases containing oxygen can lead to an explosion.

⚠ CAUTION

EQUIPMENT DAMAGE HAZARD



Failure to follow this caution may result in equipment damage or improper operation. Do not bury more than 36 in. (914 mm) of refrigerant pipe in the ground. If any section of pipe is buried, there must be a 6 in. (152 mm) vertical rise to the valve connections on the outdoor units. If more than the recommended length is buried, the refrigerant may migrate to the cooler buried section during extended periods of system shutdown. This causes refrigerant slugging and could damage the compressor at start-up.

⚠ WARNING

PRODUCT INSTALLATION

- Turn off the air conditioner and disconnect the power before performing any installation or repair. Failure to do so can cause electric shock.
- An authorized dealer or specialist must perform the installation. Defective installation can cause water leakage, electrical shock, or fire.
- Installation must be performed according to the installation instructions.
- Improper installation can cause water leakage, electrical shock, or fire.
- Contact an authorized service technician for repair or maintenance of this unit.
- That the appliance shall be installed in accordance with national wiring regulations;
- Only use the included accessories, parts, and specified parts for installation.
- Using non-standard parts can cause water leakage, electrical shock, and fire, and can cause the unit to fail.
- Install the unit in a firm location that can support the unit's weight. If the chosen location cannot support the unit's weight, or the installation is not done properly, the unit may drop and cause serious injury and damage.
- Install drainage piping according to the instructions in this manual. Improper drainage may cause water damage to your home and property.
- For units that have an auxiliary electric heater, do not install the unit within 1 m (3 ft.) of any combustible materials.
- For the units that have a wireless network function, the USB device access, replacement, and maintenance operations must be carried out by professional staff.
- **Do not** install the unit in a location that may be exposed to combustible gas leaks. If combustible gas accumulates around the unit, it may cause fire.
- **Do not** turn on the power until all work has been completed.
- When moving or relocating the air conditioner, consult experienced service technicians for disconnecting and reinstallation of the unit.
- How to install the appliance to its support, please read the information for details in "indoor unit installation" and "outdoor unit installation" sections.

TAKE NOTE OF FUSE SPECIFICATIONS

The air conditioner's circuit board (PCB) is designed with a fuse to provide overcurrent protection. The specifications of the fuse are printed on the circuit board, for example, T3.15 AL/250 VAC, T5 AL/250 VAC, T3.15 A/250 VAC, T5A/250 VAC, T20 A/250 VAC, T30 A/250VAC, etc.

NOTE

Only the blast-proof ceramic fuse can be used.

⚠ WARNING

CLEANING AND MAINTENANCE

- Turn off the device and disconnect the power before cleaning. Failure to do so can cause electrical shock.
- **Do not** clean the air conditioner with excessive amounts of water.
- **Do not** clean the air conditioner with combustible cleaning agents. Combustible cleaning agents can cause fire or deformation.

⚠ WARNING

USING FLAMMABLE REFRIGERANT

1. Installation (Space)
   - That the installation of pipe work shall be kept to a minimum.
   - That pipe work shall be protected from physical damage.
   - Where refrigerant pipes shall comply with national gas regulations.
   - That mechanical connections shall be accessible for maintenance purposes.
   - In cases that require mechanical ventilation, ventilation openings shall be kept clear of obstruction.
   - When disposing of the used product, it must be based on national regulations, and properly processed.
2. Service
   - Any person who is involved with working on or breaking into a refrigerant circuit should hold a currently valid certificate from an industry-accredited assessment authority, which authorizes their competence to handle refrigerants safely following an industry-recognized assessment specification.
3. Maintenance and repair requiring the assistance of other skilled personnel shall be carried out under the supervision of a person competent in the use of flammable refrigerants.
4. Do not use means to accelerate the defrosting process or to clean, other than those recommended by the manufacturer.
5. The appliance shall be stored in a room without continuously operating ignition sources (for example: open flames, an operating gas appliance, or an operating electric heater).
6. Be careful that foreign matter(oil, water,etc) does not enter the piping. Also, when storing the piping, securely seal the opening by pinching, taping, etc.
7. Do not pierce or burn.
8. Be aware that refrigerants may not contain an odor.
9. All working procedures that affect safety means shall

only be carried out by competent technicians.

10. Appliance shall be stored in a well-ventilated area where the room size corresponds to the room area as specified for operation.
11. The appliance shall be stored to prevent mechanical damage from occurring.
12. Joints shall be tested with detection equipment with a capability of 0.2 oz./year of refrigerant or better, with the equipment in standstill and under operation or pressure of at least these standstill or operation conditions after installation. Detachable joints shall NOT be used in the indoor side of the unit (brazed, welded joints could be used).

For R454B refrigerant charge amount and minimum room area:

The machine you purchased may be one of the types in the table below. The indoor and outdoor units are designed to be used together, and the indoor unit is connected via an air duct system to one or more rooms. Please check the machine you purchased. The height of the room cannot be less than 7.3 ft./2.2 m, and the minimum room area for operating or storage should be as specified in the following table:

Table S-1: Minimum Room Area Requirements

Mc or MREL [oz./kg]	TAmin [ft.^{2}/m^2]	Mc or MREL [oz./kg]	TAmin [ft.^{2}/m^2]	Mc or MREL [oz./kg]	TAmin [ft.^{2}/m^2]	Mc or MREL [oz./kg]	TAmin [ft.^{2}/m^2]
<=62.7/1.776	12/1.1	134/3.8	126/11.67	211.6/6.0	198/18.43	289.2/8.2	271/25.18
63.5/1.8	60/5.53	141.1/4	132/12.29	218.7/6.2	205/19.04	296.3/8.4	278/25.8
70.5/2	66/6.14	148.1/4.2	139/12.9	225.8/6.4	212/19.66	303.4/8.6	284/26.41
77.6/2.2	73/6.76	155.2/4.4	145/13.51	232.8/6.6	218/20.27	310.4/8.8	291/27.63
84.6/2.4	79/7.37	162.2/4.6	152/14.13	239.9/6.8	225/20.88	317.5/9.0	298/27.64
91.7/2.6	86/7.99	169.3/4.8	159/14.74	246.9/7.0	231/21.5	324.5/9.2	304/28.26
98.8/2.8	93/8.6	176.4/5	165/15.36	254/7.2	238/22.11	331.6/9.4	311/28.87
105.8/3	99/9.21	183.4/5.2	172/15.97	261/7.4	245/22.73	338.6/9.6	317/29.48
112.9/3.2	106/9.83	190.5/5.4	179/16.58	268.1/7.6	251/23.34	345.7/9.8	324/30.10
119.9/3.4	112/10.44	197.5/5.6	185/17.2	275.1/7.8	258/23.96	352.7/10.0	331/30.71
127/3.6	119/11.06	204.6/5.8	192/17.81	282.2/8.0	264/24.57		
Area formula	**TAmin** is the required minimum area of the total conditioned space connected by air ducts in ft.^{2}/m^2 **Mc** is the actual refrigerant charge in the system in oz/kg **MREL** is the refrigerant releasable charge in oz./kg **hinst** is the height of the bottom of the appliance relative to the floor of the room after installation. **WARNING:** The minimum room area or minimum room area of conditioned space is based on releasable charge and total system refrigerant charge..						

NOTE

If the actual room size does not fit the abovementioned conditions, please refer to the upper-level condition. Ex. we provide suggestions for a room size of 400 sq. ft., if the room size is 450 sq. ft., please refer to the 500 sq. ft. requirement.

Table S-2: Approved Matchups

Products series	Model	Indoor unit	Outdoor unit
EVOX Gen2	18K	MAUHE-H18B-2A	MO1HE-H18B-2A
	24K	MAUHE-H24B-2A	MO1HE-H24B-2A
	30K	MAUHE-H30B-2A	MO1HE-H30B-2A
	36K	MAUHE-H36B-2A	MO1HE-H36B-2A
			MO1SE-H36B-2A
	48K	MAUHE-H48B-2A	MO1HE-H48B-2A
	60K	MAUHE-H60B-2A	MO1HE-H60B-2A
EVOX G^3	18K	MAUSE-H18B-2A	MO1HE-H18B-2A
	24K	MAUSE-H24B-2A	MO1HE-H24B-2A
	30K	MAUSE-H30B-2A	MO1HE-H30B-2A[*1]
	36K	MAUSE-H36B-2A	MO1HE-H36B-2A
			MO1SE-H36B-2A
	48K	MAUSE-H48B-2A	MO1HE-H48B-2A[*2]
	60K	MAUSE-H60B-2A	MO1HE-H60B-2A
EVOX WM AHU	18K	MAWHE-H18B-2A	MO1HE-H18B-2A
	24K	MAWHE-H24B-2A	MO1HE-H24B-2A
	30K	MAWHE-H30B-2A	MO1HE-H30B-2A
	36K	MAWHE-H36B-2A	MO1SE-H36B-2A
EVOX Pancake	18K	MAPHE-H18B-2A	MO1HE-H18B-2A
	24K	MAPHE-H24B-2A	MO1HE-H24B-2A
	30K	MAPHE-H30B-2A	MO1HE-H30B-2A
	36K	MAPHE-H36B-2A	MO1SE-H36B-2A
EVOX A-coil	18K-A	MAAHE-H24B-AA	MO1HE-H18B-2A
	18K-B	MAAHE-H24B-BA	MO1HE-H18B-2A
	24K-A	MAAHE-H24B-AA	MO1HE-H24B-2A
	24K-B	MAAHE-H24B-BA	MO1HE-H24B-2A
	30K-A	MAAHE-H36B-AA	MO1HE-H30B-2A
	30K-B	MAAHE-H36B-BA	MO1HE-H30B-2A
	30K-C	MAAHE-H36B-CA	MO1HE-H30B-2A
	36K-A	MAAHE-H36B-AA	MO1SE-H36B-2A
	36K-B	MAAHE-H36B-BA	MO1SE-H36B-2A
	36K-C	MAAHE-H36B-CA	MO1SE-H36B-2A
	48K-C	MAAHE-H60B-CA	MO1HE-H48B-2A
	48K-D	MAAHE-H60B-CA	MO1HE-H48B-2A
	60K-C	MAAHE-H60B-CA	MO1HE-H60B-2A
	60K-D	MAAHE-H60B-CA	MO1HE-H60B-2A
EVOX A-coil-Uncased	18K-A	MAAHE-H24B-AA-UC	MO1HE-H18B-2A
	18K-B	MAAHE-H24B-BA-UC	MO1HE-H18B-2A
	24K-A	MAAHE-H24B-AA-UC	MO1HE-H24B-2A
	24K-B	MAAHE-H24B-BA-UC	MO1HE-H24B-2A
	30K-A	MAAHE-H36B-AA-UC	MO1HE-H30B-2A
	30K-B	MAAHE-H36B-BA-UC	MO1HE-H30B-2A
	30K-C	MAAHE-H36B-CA-UC	MO1HE-H30B-2A
	36K-A	MAAHE-H36B-AA-UC	MO1SE-H36B-2A
	36K-B	MAAHE-H36B-BA-UC	MO1SE-H36B-2A
	36K-C	MAAHE-H36B-CA-UC	MO1SE-H36B-2A
	48K-C	MAAHE-H60B-CA-UC	MO1HE-H48B-2A
	48K-D	MAAHE-H60B-DA-UC	MO1HE-H48B-2A
	60K-C	MAAHE-H60B-CA-UC	MO1HE-H60B-2A
	60K-D	MAAHE-H60B-DA-UC	MO1HE-H60B-2A

[*1]: For this product combination, an additional 21.16 oz/0.60 kg of refrigerant is required.

[*2]: For this product combination, an additional 22.93 oz/0.65 kg of refrigerant is required.

1. Installation

- Any person who is involved with working on or breaking into a refrigerant circuit should hold a current valid certificate from an industry-accredited assessment authority, which authorizes their competence to handle refrigerants safely in accordance with an industry-recognized assessment specification.
- Maintenance and repair requiring the assistance of other skilled personnel shall be carried out under the supervision of the person competent in the use of flammable refrigerants.
- That the installation of pipe work shall be kept to a minimum.
- That pipe work shall be protected from physical damage.
- Where refrigerant pipes shall comply with national gas regulations.
- That mechanical connections shall be accessible for maintenance purposes.
- Be careful that foreign matter (oil, water, etc.) does not enter the piping. Also, when storing the piping, securely seal the opening by pinching, taping, etc.
- All working procedures that affect safety means shall only be carried out by competent technicians.
- Appliance shall be stored in a well-ventilated area where the room size corresponds to the room area as specified for operation.
- Joints shall be tested with detection equipment with a capability of 0.2 oz./year of refrigerant or better, with the equipment in a standstill and under operation or under pressure of at least these standstill or operation conditions after installation. Detachable joints should NOT be used on the indoor side of the unit (brazed, welded joints could be used).
- In cases that require mechanical ventilation, ventilation openings shall be kept clear of obstruction.
- LEAK DETECTION SYSTEM installed. The unit must be powered except for service.
- For the unit with a refrigerant sensor, when the refrigerant sensor detects refrigerant leakage, the indoor unit will display an error code and emit a buzzing sound, the compressor of the outdoor unit will immediately stop, and the indoor fan will start running. The service life of the refrigerant sensor is 15 years. When the refrigerant sensor malfunctions, the indoor unit will display the error code "FHCC".
- The refrigerant sensor cannot be repaired and can only be replaced by the manufacturer. It shall only be replaced with the sensor specified by the manufacturer.

2. When a FLAMMABLE REFRIGERANT is used, the requirements for installation space of appliance and/or ventilation requirements are determined according to

- the mass charge amount(M) used in the appliance,
- the installation location,
- the type of ventilation of the location or the appliance.
- piping material, pipe routing, and installation shall include protection from physical damage in operation and service, and comply with national and local codes and standards, such as ASHRAE 15, IAPMO Uniform Mechanical Code, ICC International Mechanical Code, or CSA B52. All field joints shall be accessible for inspection before being covered or enclosed.
- that protection devices, piping, and fittings shall be protected as far as possible against adverse environmental effects, for example, the danger of water collecting and freezing in relief pipes or the accumulation of dirt and debris;
- that piping in refrigeration systems shall be so designed and installed to minimize the likelihood of hydraulic shock damaging the system;
- that steel pipes and components shall be protected against corrosion with a rustproof coating before applying any insulation;
- that precautions shall be taken to avoid excessive vibration or pulsation;
- the minimum floor area of the room shall be mentioned in the form of a table or a single figure without reference to a formula;
- after completion of field piping for split systems, the field pipework shall be pressure tested with an inert gas and then vacuum tested before refrigerant charging, according to the following requirements:
  a. The minimum pressure test for the low side of the system shall be the low side design pressure and the minimum pressure test for the high side of the system shall be the high side design pressure, unless the high side of the system can not be isolated from the low side of the system in which case the entire system shall be pressure tested to the low side design pressure.
  b. During the pressure test, the system shall maintain the pressure for at least 1 h with no decrease of pressure indicated by the test gauge, with test gauge resolution not exceeding 5% of the test pressure.
  c. During the evacuation test, after achieving a vacuum level specified in the manual or less, the refrigeration system shall be isolated from the vacuum pump and the pressure shall not rise above 1500 microns within 10 min. The vacuum pressure level shall be specified in the manual and shall be the lessor of 500 microns or the value required for compliance with national and local codes and standards, which may vary between residential, commercial, and industrial buildings.
     - field-made refrigerant joints indoors shall be tightness tested according to the following requirements: The test method shall have a sensitivity of 5 grams per year of refrigerant or better under a pressure of at least 0,25 times the maximum allowable pressure. No leak shall be detected.

3 . Qualification of workers

Any maintenance, service, and repair operations must require the qualification of the working personnel. Every working procedure that affects safety means shall only be carried out by competent technicians who joined the training and achieved competence should be documented by a certificate. The training of these procedures is carried out by national training organizations or manufacturers that are accredited to

teach the relevant national competency standards that may be set in legislation. All training shall follow the ANNEX HH requirements of UL 60335-2-40 4th Edition.
Examples of such working procedures are:

- breaking into the refrigerating circuit;
- opening of sealed components;
- opening of ventilated enclosures.

4. Checks to the area

Before beginning work on systems containing flammable refrigerants, safety checks are necessary to ensure that the risk of ignition is minimized. For repair to the refrigerating system, the following precautions shall be complied with before conducting work on the system.

5. Work procedure

Works shall be undertaken under a controlled procedure to minimize the risk of flammable gas or vapor being present while the work is being performed.

6. General work area

All maintenance staff and others working in the local area should be instructed on the nature of the work being carried out. Work in confined spaces shall be avoided.

7. Checking for the presence of refrigerant

The area should be checked with an appropriate refrigerant detector before and during work, to ensure the technician is aware of potentially flammable atmospheres. Ensure that the leak detection equipment being used is suitable for use with flammable refrigerants, i.e. no sparking, adequately sealed or intrinsically safe.

8. Presence of fire extinguisher

If any hot work is to be conducted on the refrigeration equipment or any associated parts, appropriate fire extinguishing equipment shall be available to hand. Have a dry powder or CO_2 fire extinguisher adjacent to the charging area.

9. No ignition sources

No person carrying out work on a REFRIGERATING SYSTEM which involves exposing any pipe work shall use any sources of ignition in such a manner that it may lead to the risk of a fire or explosion. All possible ignition sources, including cigarette smoking, should be kept sufficiently far away from the site of installation, repair, removal, and disposal, during which refrigerant can be released into the surrounding space. Before work takes place, the area around the equipment is to be surveyed to make sure that there are no flammable hazards or ignition risks. "No Smoking" signs shall be displayed.

10. Ventilated area

Ensure that the area is in the open or that it is adequately ventilated before breaking into the system or conducting any hot work. A degree of ventilation shall continue during the period that the work is carried out. The ventilation should safely disperse any released refrigerant and preferably expel it externally into the atmosphere.

11. Check the refrigeration equipment

Where electrical components are being changed, they shall be fit for the purpose and to the correct specification. At all times the manufacturer's maintenance and service guidelines shall be followed. If in doubt consult the manufacturer's technical department for assistance. The following checks shall be applied to installations using FLAMMABLE REFRIGERANTS:

- the actual refrigerant charge is in accordance with the room size within which the refrigerant-containing parts are installed;
- the ventilation machinery and outlets are operating adequately and are not obstructed;
- if an indirect refrigerating circuit is being used, the secondary circuits shall be checked for the presence of refrigerant;
- marking to the equipment continues to be visible and legible, marking and illegible signs shall be corrected;
- refrigeration pipe or components are installed in a position where they are unlikely to be exposed to any substance that may corrode refrigerant-containing components unless the components are constructed of materials that are inherently resistant to being corroded or are suitably protected against being so corroded.

12. Checks to electrical devices

Repair and maintenance of electrical components shall include initial safety checks and component inspection procedures. If a fault exists that could compromise safety, then no electrical supply shall be connected to the circuit until it is satisfactorily dealt with. If the fault cannot be corrected immediately it is necessary to continue operation, and adequate temporary solution shall be used.

This shall be reported to the owner of the equipment so all parties are advised.

Initial safety checks shall include:

that capacitors are discharged: this shall be done safely to avoid the possibility of sparking;

that no live electrical components and wiring are exposed while charging, recovering, or purging the system;

that there is continuity of earth bonding;

Sealed electrical components shall be replaced if it's damaged; Intrinsically safe components must be replaced if it's damaged.

13. Cabling

Check that cabling will not be subject to wear, corrosion, excessive pressure, vibration, sharp edges, or any other adverse environmental effects. The check shall also take into account the effects of aging or continual vibration from sources such as compressors or fans.

14. Detection of flammable refrigerants

Under no circumstances shall potential sources of ignition be used in the search for or detection of refrigerant leaks. A halide torch(or any other detector using a naked flame) shall not be used.

The following leak detection methods are deemed acceptable for refrigerant systems. Electronic leak detectors may be used to detect refrigerant leaks but, in the case of FLAMMABLE REFRIGERANTS, the sensitivity may not be adequate, or may need re-calibration. (Detection equipment shall be calibrated in a refrigerant-free area.) Ensure that the detector is not a potential source of ignition and is suitable for the refrigerant used. Leak detection equipment shall be set at a percentage of

the LFL of the refrigerant and shall be calibrated to the refrigerant employed, and the appropriate percentage of gas (25 % maximum) is confirmed. Leak detection fluids are also suitable for use with most refrigerants but the use of detergents containing chlorine shall be avoided as the chlorine may react with the refrigerant and corrode the copper pipe-work.

NOTE

Examples of leak-detection fluids are

- bubble method,
- fluorescent method agents.

If a leak is suspected, all naked flames shall be removed/ extinguished.

If leakage of refrigerant is found which requires brazing, all of the refrigerant shall be recovered from the system, or isolated (using shut-off valves) in a part of the system remote from the leak. See the following instructions for the removal of refrigerant.

15. Removal and evacuation

When breaking into the refrigerant circuit to make repairs - or for any other purpose conventional procedures shall be used. However, for flammable refrigerants best practice must be followed since flammability is a consideration.

The following procedure shall be adhered to:

- safely remove refrigerant following local and national regulations;
- evacuate;
- purge the circuit with inert gas;
- evacuate;
- continuously flush or purge with inert gas when using a flame to open the circuit; and
- open the circuit.

The refrigerant charge shall be recovered into the correct recovery cylinders if venting is not allowed by local and national codes. For appliances containing flammable refrigerants, the system shall be purged with oxygen-free nitrogen to render the appliance safe for flammable refrigerants. This process might need to be repeated several times. Compressed air or oxygen shall not be used for purging refrigerant systems.

For appliances containing flammable refrigerants, refrigerant purging shall be achieved by breaking the vacuum in the system with oxygen-free nitrogen and continuing to fill until the working pressure is achieved, then venting to the atmosphere, and finally pulling down to a vacuum. This process shall be repeated until no refrigerant is within the system. When the final oxygen-free nitrogen charge is used, the system shall be vented down to atmospheric pressure to enable work to take place.

The outlet for the vacuum pump shall not be close to any potential ignition sources, and ventilation shall be available.

16. Charging procedures

In addition to conventional charging procedures, the following requirements shall be followed:

- Works shall be undertaken with appropriate tools only (In case of uncertainty, please consult the manufacturer of the tools for use with flammable refrigerants) Ensure that contamination of different refrigerants does not occur when using charging equipment. Hoses or lines shall be as short as possible to minimize the amount of refrigerant contained in them.
- Ensure that the refrigeration system is earthed before charging the system with refrigerant.
- Label the system when charging is complete(if not already). Extreme care shall be taken not to overfill the refrigeration system.
- Before recharging the system, it shall be pressure tested with oxygen-free nitrogen (OFN). The system shall be leak tested on completion of charging but before commissioning. A follow-up leak test shall be carried out before leaving the site.

17. Decommissioning

Before carrying out this procedure, the technician must be completely familiar with the equipment and all its details. It is recommended good practice that all refrigerants are recovered safely. Before the task is carried out, an oil and refrigerant sample shall be taken in case analysis is required before the re-use of recovered refrigerant. Electrical power must be available before the task commences.

a. Become familiar with the equipment and its operation.
b. Isolate system electrically
c. Before attempting the procedure ensure that:
   - mechanical handling equipment is available, if required, for handling refrigerant cylinders;
   - all personal protective equipment is available and being used correctly;
   - the recovery process is supervised at all times by a competent person;
   - recovery equipment and cylinders conform to the appropriate standards.

d. Pump down the refrigerant system, if possible.
e. If a vacuum is not possible, make a manifold so that refrigerant can be removed from various parts of the system.
f. Make sure that the cylinder is situated on the scales before recovery takes place.
g. Start the recovery machine and operate following instructions.
h. Do not overfill cylinders (no more than 80 % volume liquid charge)
i. Do not exceed the maximum working pressure of the cylinder, even temporarily.
j. When the cylinders have been filled correctly and the process completed, make sure that the cylinders and the equipment are removed from the site promptly and all isolation valves on the equipment are closed off.
k. Recovered refrigerant shall not be charged into another refrigeration system unless it has been cleaned and checked.

18. Labelling

Equipment shall be labeled stating that it has been de-commissioned and emptied of refrigerant. The label shall be dated and signed. For appliances containing FLAMMABLE REFRIGERANTS, ensure that there are labels on the equipment stating the equipment contains

FLAMMABLE REFRIGERANT.

19. Recovery

When removing refrigerant from a system, either for servicing or decommissioning, it is recommended good practice that all refrigerants are removed safely.

When transferring refrigerant into cylinders, ensure that only appropriate refrigerant recovery cylinders are employed. Ensure that the correct number of cylinders for holding the total system charge is available. All cylinders to be used are designated for the recovered refrigerant and labeled for that refrigerant (i. e. special cylinders for the recovery of refrigerant). Cylinders shall be complete with pressure-relief valves and associated shut-off valves in good working order. Empty recovery cylinders are evacuated and, if possible, cooled before recovery occurs.

The recovery equipment shall be in good working order with a set of instructions concerning the equipment that is at hand and shall be suitable for the recovery of the flammable refrigerant. If in doubt, the manufacturer should be consulted. In addition, a set of calibrated weighing scales shall be available and in good working order. Hoses shall be complete with leak-free disconnect couplings and in good condition.

The recovered refrigerant shall be processed according to local legislation in the correct recovery cylinder, and the relevant waste transfer note arranged. Do not mix refrigerants in recovery units especially not in cylinders.

If compressors or compressor oils are to be removed, ensure that they have been evacuated to an acceptable level to make certain that flammable refrigerant does not remain within the lubricant. The compressor body shall not be heated by an open flame or other ignition sources to accelerate this process. When oil is drained from a system, it shall be carried out safely.

20. Transportation, marking, and storage for units that employ flammable refrigerants

a. **General** - The following information is provided for units that employ FLAMMABLE REFRIGERANTS.

b. **Transport of equipment containing flammable refrigerants** - Attention is drawn to the fact that additional transportation regulations may exist concerning equipment containing flammable gas. The maximum number of pieces of equipment or the configuration of the equipment permitted to be transported together will be determined by the applicable transport regulations.

c. **Marking of equipment using signs** - Signs for similar appliances used in a work area are generally addressed by local regulations and give the minimum requirements for the provision of safety and/or health signs for a work location.

All required signs are to be maintained, and employers should ensure that employees receive suitable and sufficient instruction and training on the meaning of appropriate safety signs and the actions that need to be taken in connection with these signs.

The effectiveness of signs should not be diminished by too many signs being placed together.

Any pictograms used should be as simple as possible and contain only essential details.

d. **Disposal of equipment using flammable refrigerants See national regulations.**

e. **Storage of equipment/appliances -** The storage of the appliance should be following the applicable regulations or instructions, whichever is more stringent.

f. **Storage of packed (unsold) equipment** - Storage package protection should be constructed in such a way that mechanical damage to the equipment inside the package will not cause a leak of the REFRIGERANT CHARGE.

The maximum number of pieces of equipment permitted to be stored together will be determined by local regulations.

21. Unventilated areas

- An unventilated area where the appliance using FLAMMABLE REFRIGERANTS is installed shall be so constructed that should any refrigerant leak, it will not stagnate to create a fire or explosion hazard.
- If appliances are connected via an air duct system to one or more rooms with A2L REFRIGERANTS are installed in a room with an area less than Amin, that room shall be without continuously operating open flames (e.g. an operating gas appliance) or other POTENTIAL IGNITION SOURCES (e.g. an operating electric heater, hot surfaces). A flame-producing device may be installed in the same space if the device is provided with an effective flame arrest.
- Auxiliary devices that may be a POTENTIAL IGNITION SOURCE shall not be installed in the ductwork. Examples of such POTENTIAL IGNITION SOURCES are hot surfaces with a temperature exceeding 700 °C and electric switching devices.
- Only auxiliary devices (such as certificated heater kit) approved by the appliance manufacturer or declared suitable with the refrigerant shall be installed in connecting ductwork.
- For duct-connected appliances, false ceilings or drop ceilings may be used as a return air plenum if a REFRIGERANT DETECTION SYSTEM is provided in the appliance and any external connections are also provided with a sensor immediately below the return air plenum duct joint.
- REFRIGERANT SENSORS for REFRIGERANT DETECTION SYSTEMS Shall Only be replaced with sensors specified by the appliance manufacturer.
- LEAK DETECTION SYSTEM installed. The unit must be powered except for service.

Table S-3: Explanation of symbols displayed on the indoor unit or outdoor unit

	**WARNING**	This symbol shows that this appliance used a flammable refrigerant. If the refrigerant is leaked and exposed to an external ignition source, there is a risk of fire.
	**CAUTION**	This symbol shows that the operation manual should be read carefully.
	**CAUTION**	This symbol shows that service personnel should be handling this equipment referencing the installation manual.
	**CAUTION**	This symbol shows that information is available such as the operating manual or installation manual.



Caution: Risk of fire/flammable materials

Installation Accessories

The system is shipped with the following accessories. Use all the installation parts and accessories to install the system. Improper installation may result in water leakage, electrical shock, and fire, or cause the equipment to fail. Keep the installation manual in a safe place and do not discard any other accessories until the installation work has been completed.

Table A-1: Included Accessories

QTY.	Part Name	Part Image
1	Drain joint	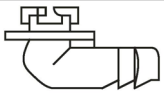
1	Seal ring (Not available for the MO1SE-H36B-2A and MO1HE-H48B-2A)	
2	Flare to braze adapter (See Table A-3)	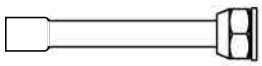

Table A-2: Optional Accesssories

QTY.	Part Name	Part Image
1	Drain pipe	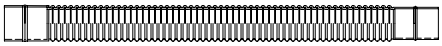
4	Rubber Pad	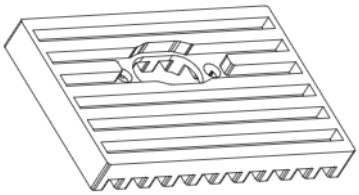

Table A-3: Suction and Liquid Line Flare to Braze Adapter Sizes

Air Handler Unit Model	Air Handler Unit Connection (in. flare)		Adapter at Air Handler Unit (in. flare to braze)	Outdoor Model	Outdoor Unit Connection (in. flare)		Adapter at Outdoor Unit (in. flare to flare or braze)
18K-60K	Liquid	3/8	3/8 flare→3/8 braze	18K/ 24K/30K/36K/ 48K/60K	-	-	-
	Gas	3/4	3/4 flare→3/4 braze		Liquid	3/8	3/8 flare→3/8 braze
					Gas	3/4	3/4 flare→3/4 braze

NOTE

If the outdoor unit is higher than the indoor unit, prevent rain from flowing into the indoor unit along the connection pipe by making a condensate loop in the connection pipe before it enters the wall to the indoor unit. This ensures rain drips from the connection pipe before entering the wall.

Piping and the interconnecting wiring are field supplied.

Dimensions

Table D-1: Dimensions

System Size	Unit Sizes			Mounting Dimensions	
	Height (H) in. (mm)	Width (W) in. (mm)	Depth (D) in. (mm)	(A) in. (mm)	(B) in. (mm)
18K	26-1/2 (673)	35 (890)	13-15/32 (342)	26-1/8 (663)	13-15/16 (354)
24K	26-1/2 (673)	35 (890)	13-15/32 (342)	26-1/8 (663)	13-15/16 (354)
30K	31-29/32 (810)	37-1/4 (946)	16-5/32 (410)	26-1/2 (673)	15-7/8 (403)
36K	38-3/8 (975)	38-19/32 (980)	16-5/16 (415)	24-1/4 (616)	15-5/8 (397)
48K	38-3/8 (975)	38-19/32 (980)	16-5/16 (415)	24-1/4 (616)	15-5/8 (397)
60K	52-1/2 (1,333)	37-1/2 (952)	16-5/16 (415)	24-35/36 (634)	15-29/32 (404)

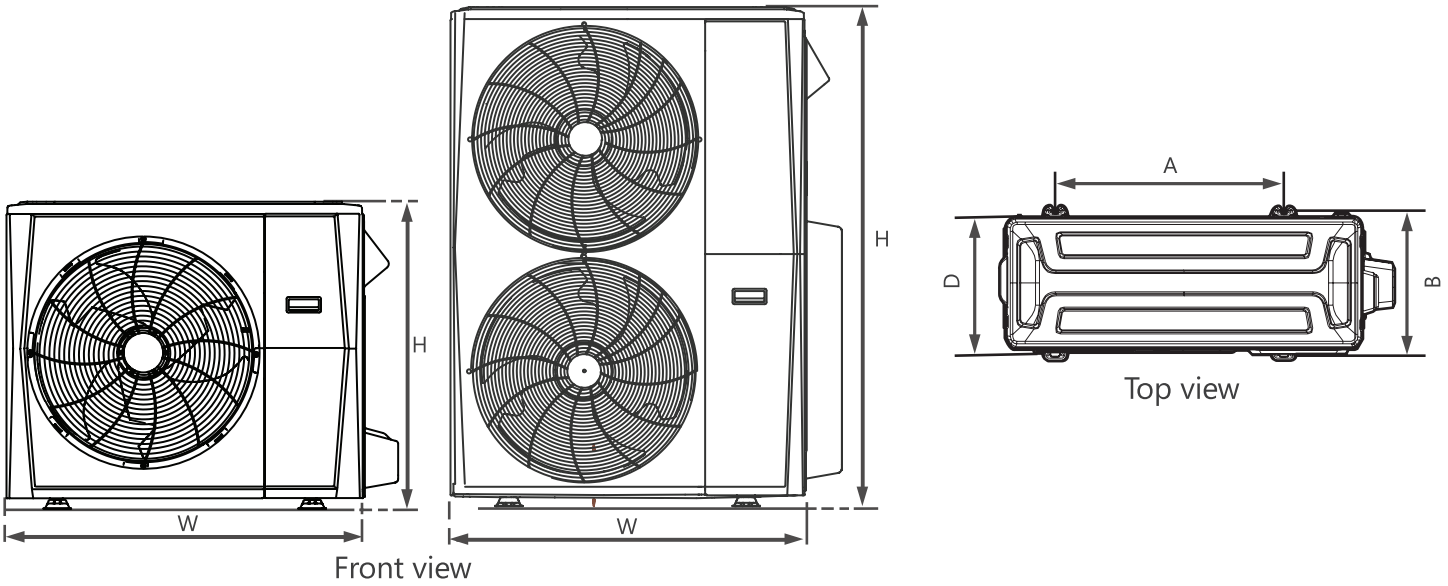

Figure D-1: Unit Dimensions

NOTE

Images are for illustration purposes only. Actual models may differ slightly.

Clearances

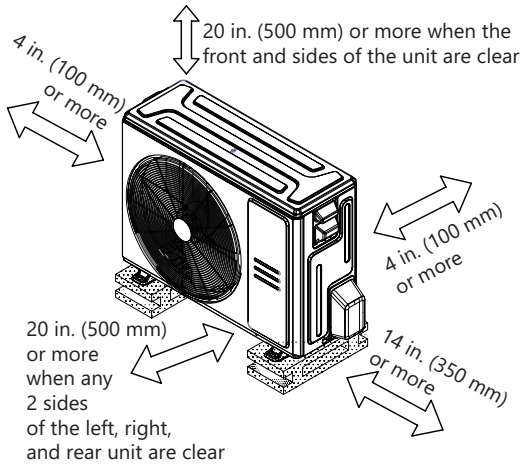

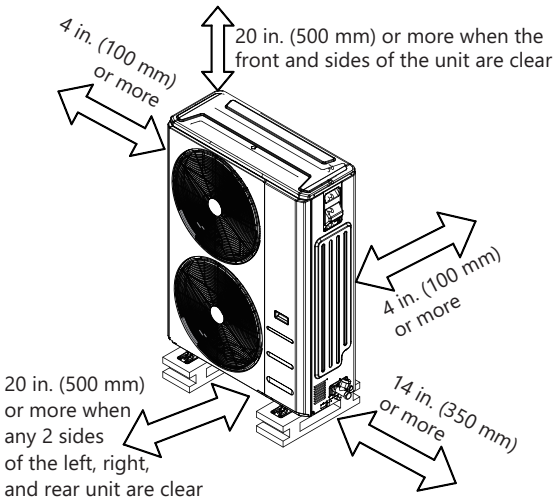

Fig. C-1: Clearance Dimensions

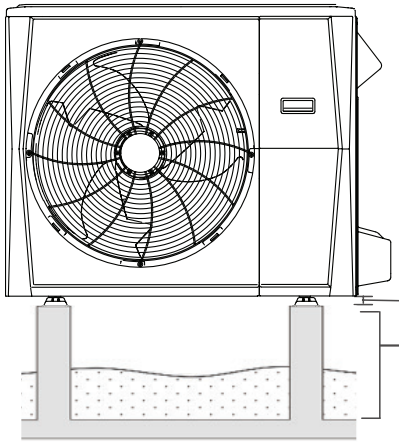

Fig. C-2: Clearance for Annual Snowfall

NOTE

The outdoor unit must be mounted at least 11.8 in. (300 mm) above the maximum anticipated snow fall

⚠ CAUTION

EQUIPMENT DAMAGE HAZARD



Failure to follow this caution may result in equipment damage or improper operation.
In regions with snowfall and cold temperatures, avoid installing the outdoor unit in areas where it can be covered by snow.
Blocking the air intake may result in reduced airflow, significantly reduced performance, and damage to the equipment.

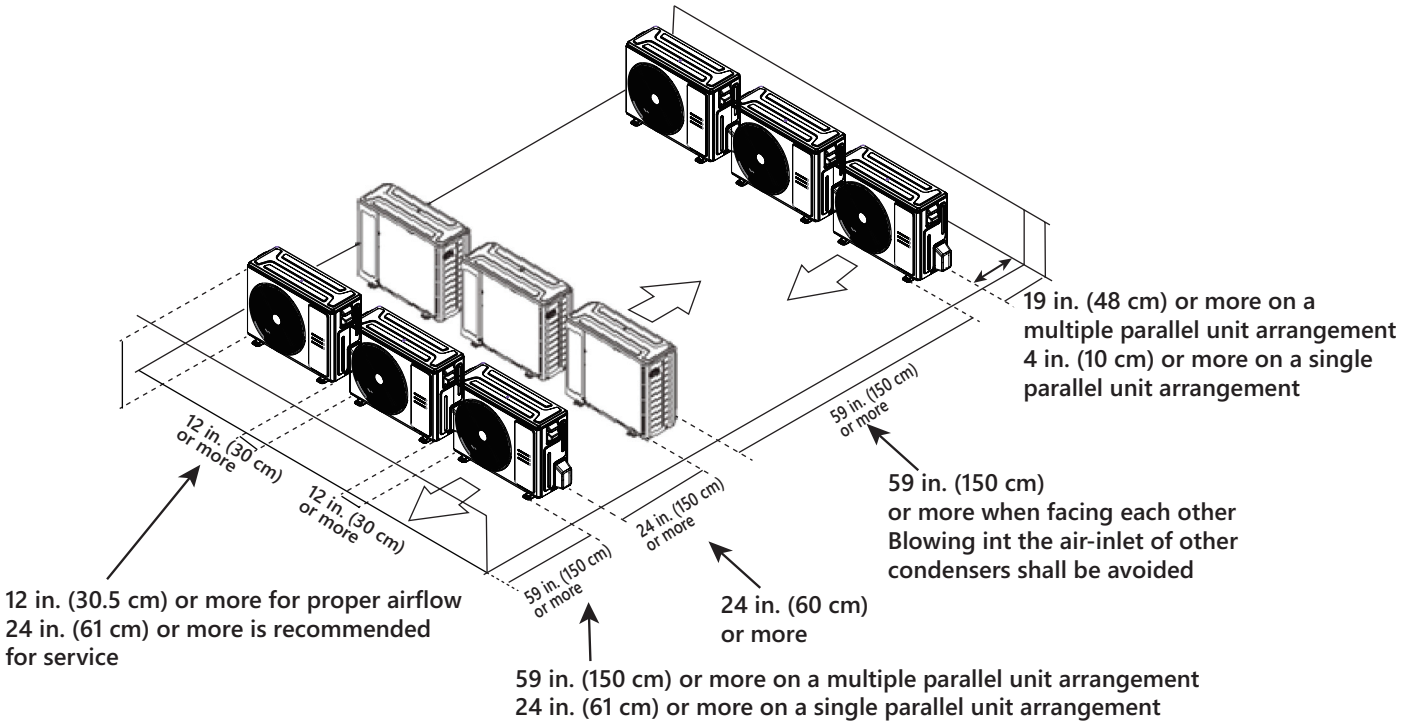

Fig. C-3: Clearances for Multiple Units

Installation Requirements

Install the unit(s) in the following areas:

- A location that is convenient for installation and not exposed to strong winds.
- A location that can bear the weight of the outdoor unit and where the outdoor unit can be mounted in a level position.
- A location which provides appropriate clearances (see Fig. C-1).
- Allow sufficient space for airflow and service of the unit. See Fig. C-3 for the required minimum distances between the unit or walls.

NOTE

DO NOT install the unit in the following locations:

- Near an obstacle that will block air inlets and outlets.
- In a location that is exposed to large amounts of dust.
- With special environmental conditions.
- Near animals or plants that will be harmed by hot air discharge.
- Near any source of combustible gas
- Near a public street, crowded areas, or where noise from the unit will disturb others.

⚠ WARNING

PRODUCT INSTALLATION

- Installation must be performed by an authorized dealer or specialist. A defective installation can cause water leakage, electrical shock, or fire.
- The installation must be performed according to the installation instructions. Improper installation can cause water leakage, electrical shock, or fire. (In North America, installation must be performed in accordance with the requirements of NEC or CEC by authorized personnel only.)
- Contact an authorized service technician for repair or maintenance of this unit. This appliance must be installed in accordance with local codes.
- Only use the included accessories, parts, and specified parts for installation. Using non-standard parts can cause water leakage, electrical shock, fire, or unit failure.
- To prevent exposure to wind, install the outdoor unit with its air inlet side facing the wall
- Install drainage piping according to the instructions in this manual. Improper drainage may cause water damage to your home and property.
- **DO NOT** install the unit in a location that may be exposed to combustible gas leaks. If combustible gas accumulates around the unit, it may cause a fire.
- **DO NOT** turn on the power until all work has been completed.
- When moving or relocating the system, consult experienced service technicians for the disconnection and re-installation of the unit.

Installation

Step 1 - Check Equipment

Unpack the unit and move it to the final location. Remove the carton, taking care not to damage the unit. Inspect the equipment for damage before installation. File a claim with the shipping company if the shipment is damaged or incomplete.

Locate the unit rating plate which contains the proper installation information. Check the rating plate to ensure the unit matches the job specifications.

Step 2 - Mount Unit

⚠ CAUTION

SPECIAL CONSIDERATIONS FOR EXTREME WEATHER

If the unit is exposed to heavy wind:

Install the unit so that the air outlet fan is at a 90 ° angle to the direction of the winds. See Fig. 2-1.

If the unit is exposed to heavy rain or snow:

Build a shelter above the unit to protect it from rain or snow. Be careful to not obstruct airflow around the unit.

1. Select the installation location of the outdoor unit following the installation requirements. To prevent high wind exposure, install the outdoor unit with the air inlet side facing the wall (see Fig. 2-1).

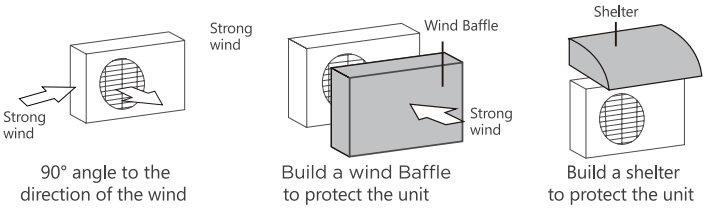

Fig. 2-1: High Wind Installation

2. Use a rigid base to support the unit in a level position. If conditions or local codes require the unit to be attached to a pad, tie-down bolts should be used and fastened through knockouts provided in the unit base pan. For hurricane tie downs, contact the distributor for details and PE (Professional Engineer) Certification if required.

GROUND INSTALLATION

1. Mark the positions for four expansion bolts based on the dimensions chart
2. Pre-drill holes for expansion bolts.
3. Place a nut on the end of each expansion bolt.
4. Hammer expansion bolts into the pre-drilled holes.
5. Remove the nuts from the expansion bolts and place the outdoor unit on the bolts.
6. Put the washer on each expansion bolt, then replace the nuts.
7. Using a wrench, tighten each nut until snug.

⚠ WARNING

When drilling into concrete, eye protection is recommended at all times.

WALL INSTALLATION

1. Mark the position of bracket holes based on the dimensions chart.
2. Pre-drill the holes for the expansion bolts. Place a washer and nut on the end of each expansion bolt.
3. Thread expansion bolts through holes in mounting brackets, put mounting brackets in position, and hammer expansion bolts into the wall.
4. Check that the mounting brackets are level. Carefully lift the unit and place its mounting feet on brackets.
5. Bolt the unit firmly to the brackets.
6. If allowed, install the unit with rubber isolator pads o reduce vibrations and noise.

⚠ CAUTION

Make sure that the wall is made of solid brick, concrete, or similarly strong material. The wall must be able to support at least four times the weight of the unit.

Step 3 - Condensate Drain Installation

NOTE

The installation of drains must comply with local sanitation codes.

Install the outdoor unit drain joint

Fit the seal into the drain joint, then insert the drain joint into the base pan hole of the outdoor unit. Rotate 90° to assemble them securely. Connect the drain joint with an extension drain hose to prevent condensate from draining off the outdoor unit during the heating mode.

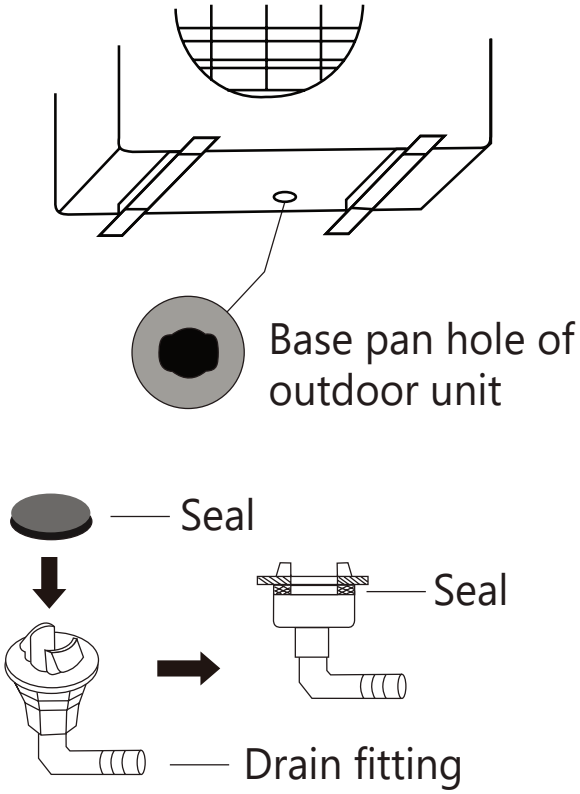

Fig. 3-1: Drain Joint Assembly

NOTE

Images are for illustration purposes only.

⚠ CAUTION

EQUIPMENT DAMAGE HAZARD



In cold climates, do not use an adapter or drain hose. If water drains too slowly, it can freeze in the hose and flood the unit.

NOTE

The Base pan is manufactured with multiple holes for proper draining during defrosting. Rubber plugs are available through a local dealer for applications requiring sealing these holes and redirecting the condensate drain. **The base pan rubber plug part number for the outdoor unit is 12600801A00077.**

Table 3-1: Operating Ambient Temperatures

Operating Range and Humidity			Extreme Heat Models
Operating Range	Cooling Outdoor Min - Max DB	°F	-22~122
		°C	-30~50
	Heating Outdoor Min - Max DB	°F	-22~75
		°C	-30~24
Operating Humidity		%	0~80

Step 4 - Refrigerant Piping Connections

Table 4-1: Piping Sizes

System Size		18K	24K	30K	36K	48K	60K
Maximum Piping Length	ft. (m)	98.4 (30)	164 (50)	164 (50)	246 (75)	246 (75)	246 (75)
Minimum Piping Length		10 (3)					
Max. outdoor-indoor height difference (OU higher than IU)		65.6 (20)	82 (25)	82 (25)	98.4 (30)	98.4 (30)	98.4 (30)
Max. outdoor-indoor height difference (IU higher than OU)		65.6 (20)	82 (25)	82 (25)	98.4 (30)	98.4 (30)	98.4 (30)
Gas Pipe (size - connection type)	in. (mm)	ø3/4 (19)					
Liquid Pipe (size-connection)		ø3/8 (9.52)					
Unit Connection (in. flare)	Liquid	3/8					
	Gas	3/4					
Adapter at Outdoor Unit (in. flare to flare or braze)	Liquid	3/8 flare→3/8 braze					
	Gas	3/4 flare→3/4 braze					

NOTE

Ensure that the length of the refrigerant pipe, the number of bends, and the drop height between the indoor and outdoor units meet the requirements shown in Table 4-1.

IMPORTANT

Use refrigeration grade tubing **ONLY**. No other type of tubing may be used. The use of other types of tubing will void the manufacturer's warranty.

- The minimum refrigerant line length between the indoor and outdoor unit is 10 ft. (3 m).
- Do not open the service valves or remove the protective caps from the tubing ends until all connections are made.
- Bend the tubing with bending tools to avoid kinks and flat spots.
- Keep the tubing free of dirt, sand, moisture, and other contaminants to avoid damaging the refrigerant system.
- Purge the pipes with nitrogen to remove dirt and moisture.
- Insulate the suction line with a minimum of 3/8 in. (10 mm) wall thermal pipe insulation. Inserting the tubing into the insulation before making the connections will save time and improve installation quality.

⚠ WARNING

All field piping must be completed by a licensed technician and must comply with local and national regulations.

When the system is installed in a small room, measures must be taken to prevent the refrigerant concentration in the room from exceeding the safety limit in the event of refrigerant leakage. If the refrigerant leaks and its concentration exceeds its proper limit, hazards due to lack of oxygen may result.

When installing the refrigeration system, ensure that air, dust, moisture, or foreign substances do not enter the refrigerant circuit. Contamination in the system may cause poor operating capacity, high pressure in the refrigeration cycle, explosion, or injury.

Ventilate the area immediately if there is refrigerant leakage during the installation.

Leaked refrigerant gas is hazardous. Ensure there is no refrigerant leakage after completing the installation work.

Oil traps

Avoid sags in the suction line to prevent the formation of oil traps.

⚠ CAUTION

If oil flows back into the outdoor unit's compressor, this might cause liquid compression or deterioration of oil return. Oil traps in the rising gas piping can prevent this.

An oil trap should be installed every 20 ft. (6 m) of the vertical suction line riser (<36,000 Btu/h unit).

An oil trap should be installed every 32.8ft(10m) of vertical suction line riser (≥ 36,000 BTU/h unit).

The branching pipe must be installed horizontally. An angle of more than 10° may cause a malfunction.

⚠ CAUTION

DO NOT install the connecting pipe until both the indoor and outdoor units have been installed.

Insulate the suction line to prevent condensation.

Use the following steps to connect the refrigerant piping:

1. Run the interconnecting piping from the outdoor unit to the indoor unit.
2. Connect the refrigerant piping and drain line outside the indoor unit. Complete the pipe insulation at the flare connection then fasten the piping and wiring to the wall as required. Completely seal the hole in the wall.
3. Cut the tubing to the correct length.
   When preparing refrigerant pipes, take extra care to cut

and flare them properly. This ensures efficient operation and minimizes the need for future maintenance.

a. Measure the distance between the indoor and outdoor units.
b. Using a pipe cutter, cut the pipe a little longer than the measured distance.
c. Make sure the pipe is cut at a perfect 90° angle.

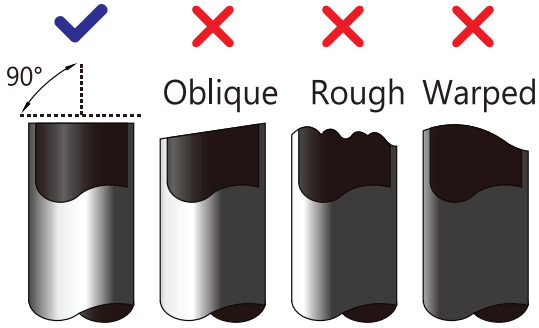

Fig. 4-1: Correct Pipe Cutting

⚠ CAUTION

DO NOT DEFORM PIPE WHILE CUTTING

Be extra careful not to damage, dent, or deform the pipe while cutting. This will drastically reduce the heating efficiency of the unit.

4. Remove the Burrs

Burrs can affect the air-tight seal of the refrigerant piping connection. Therefore, they must be completely removed. To remove:

a. Hold the pipe at a downward angle to prevent burrs from falling into the pipe.
b. Using a reamer or deburring tool, remove all burrs from the cut section of the pipe

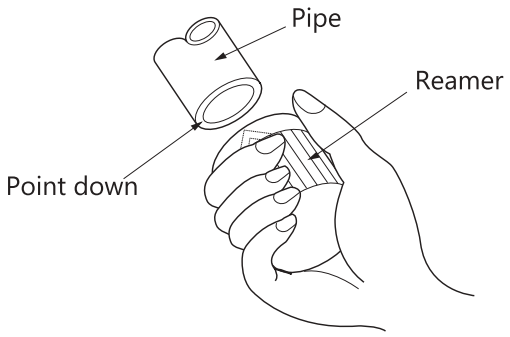

Fig. 4-2: Reamer Tool

5. Flare the Pipe Ends.

Proper flaring is essential to achieving an airtight seal.

a. After removing the burrs from the cut pipe, seal the ends with PVC tape to prevent foreign materials from entering the pipe.
b. Sheath the pipe with insulating material.
c. Place the factory flare nut on the pipe facing the proper direction. Make sure they are facing the right direction. Once the ends are flared, it is impossible to put them on or change their direction.

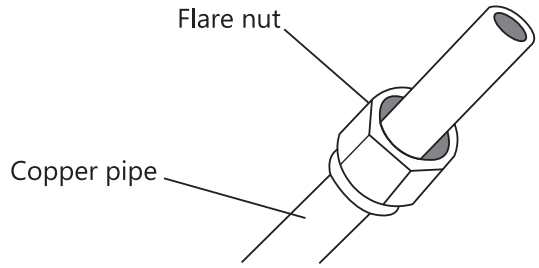

Fig. 4-3: Copper pipe and flare nut

d. Remove the PVC tape from the ends of the pipe when ready to perform the flaring work.
e. Clamp the flare block on the end of the pipe. The end of the pipe must extend beyond the flare form.

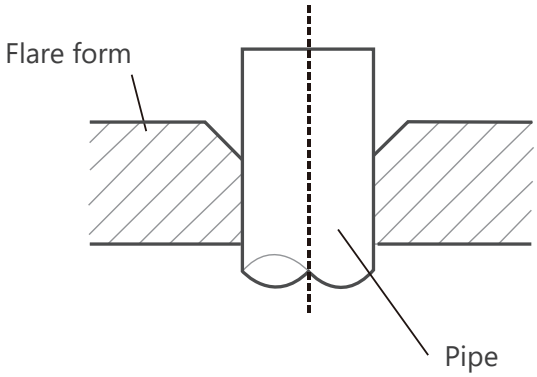

Fig. 4-4: Flare Form

f. Place the flaring tool onto the form.
g. Turn the handle of the flaring tool clockwise until the pipe is fully flared. Flare the pipe following the dimensions in Table 4-2.

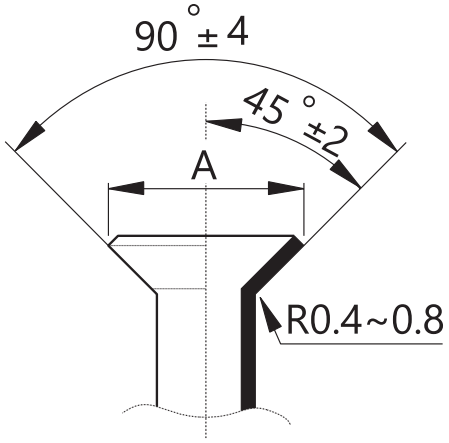

Fig. 4-5: Flare Shape

Table 4-2: Flare Dimensions/Tightening Torque

Pipe Size Outside Diameter	Flare Dimensions (A)
in. (mm)	in. (mm)
Ø1/4 (6.35)	11/23 - 23/64 (~9.1)
Ø3/8 (9.52)	1/2 - 33/64 (~13.2)
Ø1/2 (12.7)	41/64 -31/32 (~16.6)
Ø5/8 (15.88)	49/64 - 35/32 (~19.7)
Ø3/4 (19.05)	-

Tightening Torque for Flare Nuts

Pipe Size Outside Diameter	Tightening Torque
in. (mm)	ft. - lbs. (N.m)
Ø1/4 (6.35)	13.02 - 14.47 (18~20)
Ø3/8 (9.52)	23.15 - 28.21 (32~39)
Ø1/2 (12.7)	35.44 - 42.67 (49~59)
Ø5/8 (15.88)	41.23-51.35 (57~71)
Ø3/4 (19.05)	48.46-73.05 (67~101)

NOTE

Use both a backup wrench and a torque wrench when connecting or disconnecting pipes to or from the unit.

h. Remove the flaring tool and flare block, then inspect the end of the pipe for cracks and even flaring.

6. Connect the Pipes

Connect the copper pipes to the indoor unit first, then connect the pipes to the outdoor unit. Connect the low-pressure pipe first, then connect the high-pressure pipe.

a. Align the center of the two pipes that you will connect.

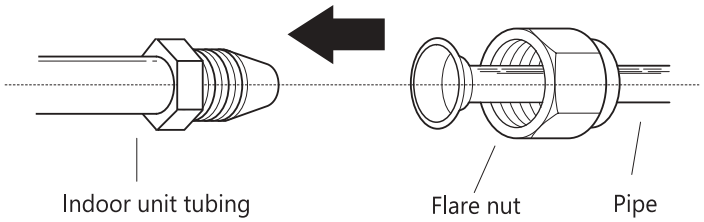

Fig. 4-6: Align the center of the two pipes

b. Tighten the flare nut as much as possible by hand.

c. Using a wrench, grip the nut on the unit tubing.

d. While firmly gripping the nut, use a torque wrench to tighten the flare nut according to the torque values listed in Table 4-2.

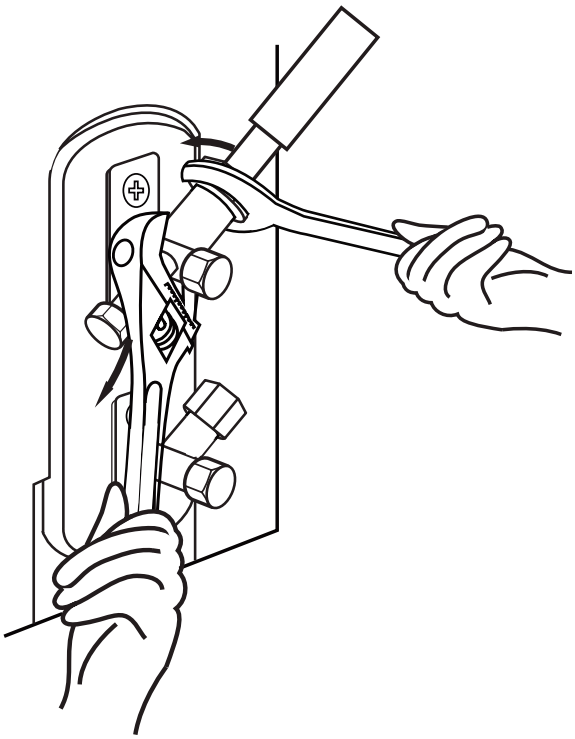

Fig. 4-7: Torque wrench with backup wrench

⚠ CAUTION

Wrap insulation around the piping. Direct contact with the bare piping may result in burns or frostbite. Ensure the pipe is properly connected. Over-tightening may damage the bell mouth and under-tightening may lead to leakage.

All tubing bends should be performed with a properly sized tubing bender to prevent kinking or damaging the tubing.

e. While firmly gripping the nut, use a torque wrench to tighten the flare nut according to the torque values listed in Table 4-2.

NOTE

MINIMUM BEND RADIUS

Carefully bend the tubing in the middle according to the diagram below. DO NOT bend the tubing over 90° or more than 3 times. Use care when bending pipe, do not kink pipe.

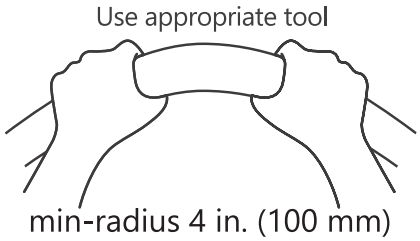

Fig. 4-8: Bend the Tubing

NOTE

While bundling these items together, **DO NOT** intertwine or cross the signal cable with any other wiring.

f. Thread this line set through the wall and connect it to the outdoor unit.

g. Insulate the suction line, including the outdoor unit valves.

NOTE

DO NOT open the service valves until the pressure test is complete.

7. Brazing Adapter (Optional)

When flare to braze adapter is used, follow these steps:

a. Refer to the liquid line and gas line connection O.D. sizes in Table 4-2 based on the model being installed. Cut and deburr the tubing (review "Remove the Burrs" in Step 4) to prepare it for brazing. Set up the nitrogen apparatus and connect it to the outside unit to flow nitrogen while brazing. Braze the tubing and any fittings to obtain a proper seal.

b. Insulate the suction line completely, including the outdoor unit valves.

8. Pressure test the piping:

a. Adjust the nitrogen apparatus to pressurize the system. Pressure test the system to a maximum of 500 psig for at least 60 minutes.

⚠ CAUTION

Only use Dry Nitrogen to pressure test refrigerant systems. The use of other gases can result in injury, property damage, or death.

NOTE

Use a nitrogen regulator.

a. Attach the low side gauge hose to the 5/16" Schrader valve on the outdoor unit service valve.
b. Attach the charging hose to the regulator on the dry nitrogen tank.
c. Preset the nitrogen regulator to 500 psi.
d. Slowly pressurize the line set until the low side gauge reads 500 psi. Do not exceed 500 psi.
e. Close all the valves on the nitrogen tank and gauges.
f. Allow the pressure test to stand for a minimum of 60 minutes.
g. If the pressure goes down in the 60-minute delay, leak check the tubing and flare fittings to identify the source of the leak. Return to Step C, above.
h. If the pressure holds, release the nitrogen and proceed with "Step 7 -Air Evacuation

Step 5 - Power Wiring Connections

BEFORE PERFORMING ANY ELECTRICAL WORK, READ

⚠ WARNING

THESE WARNINGS.

- If there is a serious safety issue with the power supply, stop work immediately. Explain your reasoning to the client, and refuse to install the unit until the safety issue is properly resolved.
- Power voltage should be within 90-110% of rated voltage. Insufficient power supply can cause malfunction, electrical shock, or fire.
- Installation of an external surge suppressor at the outdoor disconnect is recommended.
- Power must be connected, a switch or circuit breaker that disconnects all poles and has a contact separation of at least 1/8 in. (3 mm) must be incorporated into the fixed wiring. The qualified technician must use an approved circuit breaker or switch.
- Only connect the unit to an individual branch circuit. Do not connect another appliance to that circuit.
- Make sure to properly ground the air conditioner.
- Every wire must be firmly connected. Loose wiring can cause the terminal to overheat, resulting in product malfunction and possible fire.
- Do not let wires touch or rest against refrigerant tubing, the compressor, or any moving parts within the unit.
- To avoid getting an electric shock, never touch the electrical components soon after the power supply has been turned off. After turning off the power, always wait 10 minutes or more before you touch the electrical components.
- **ISOLATE THE POWER SUPPLY LEADS AND COMMUNICATION LEADS BY THE STRAIN RELIEF AND KEEP POWER SUPPLY LEADS AWAY FROM COMMUNICATION LEADS.**
- Connect the outdoor wires before connecting the indoor wires.

NOTE

- When connecting the wires, strictly follow the wiring diagram found inside the electrical box cover.
- Choose the cable type according to the local electrical switches and regulations.
- Please choose the right cable size according to the Minimum Circuit Ampacity indicated on the nameplate of the unit.

⚠ WARNING

BEFORE PERFORMING ANY ELECTRICAL OR WIRING WORK, TURN OFF THE MAIN POWER TO THE SYSTEM.

Install All Power and Interconnecting Wiring to Outdoor Units

1. Mount the outdoor power disconnect.
2. Run the power wiring from the main box to disconnect per NEC or CEC and local codes.
3. Remove the field wiring cover from the unit by loosening the screws.
4. Remove the caps on the conduit panel.

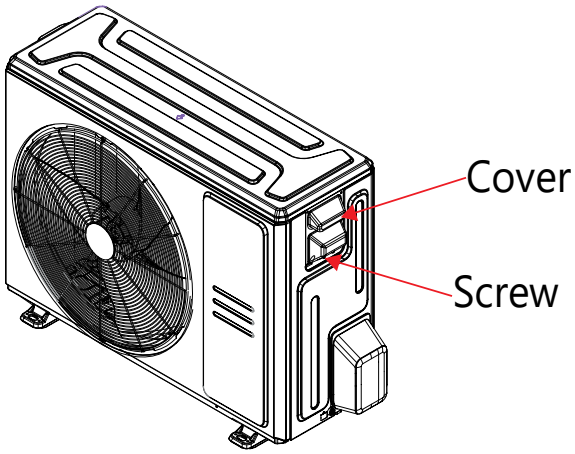

Fig. 5-1: Remove Electrical Cover

5. Connect the conduit-to-conduit panel (see Fig. 5-2).

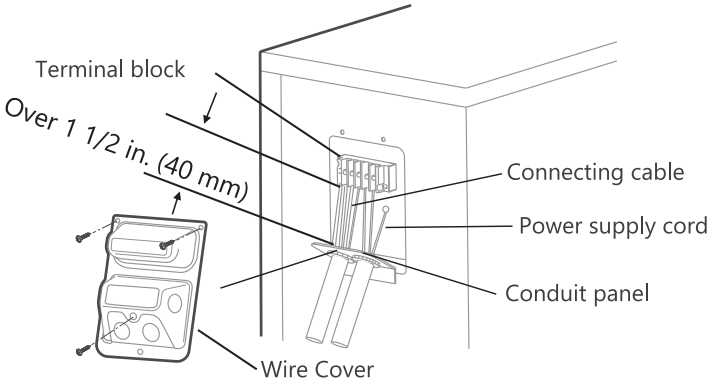

Please select the appropriate through-hole according to the diameter of the wire.

Fig. 5-2: Field Wiring Conduit Location

6. Properly connect both the power supply and control lines to the terminal block per the connection diagram for the appropriate unit capacity and voltage.
7. Ground the unit in accordance with NEC or CEC and local electrical codes.
8. Use the lock nuts to secure the conduit.

9. Reinstall the field wiring cover.

⚠ CAUTION

EQUIPMENT DAMAGE HAZARD

Failure to follow this caution may result in equipment damage or improper operation.

Be sure to comply with local codes while running wire from the indoor unit to the outdoor unit.

Disconnecting means must be provided and shall be located within sight and readily accessible from the air conditioner. The connecting cable with the conduit shall be routed through a hole in the conduit panel.

An approved and listed fitting must be used to securely affix conduit in accordance with NEC and local codes.

Wiring

All wires must be sized per NEC (National Electrical Code) or CEC (Canadian Electrical Code) and local codes. Use Electrical Data Table 6-3 MCA (minimum circuit amps) and MOP (maximum overcurrent protection) to correctly size the wires and the disconnect fuse or breakers respectively.

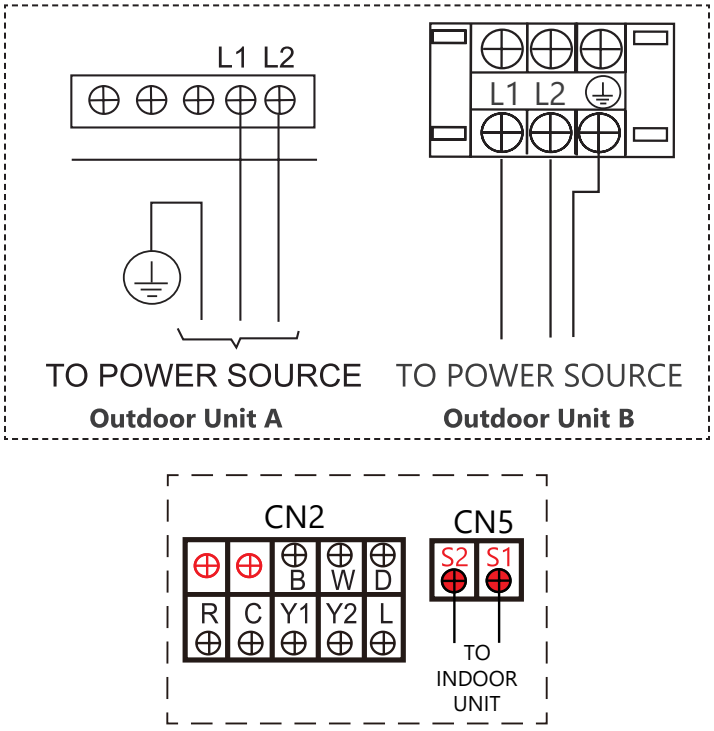

Fig. 5-3: High Voltage Power Connections

Table 5-1: ODU 485 + 24 V Connection Guide

485		
L1	Power	
L2		
S1	To Midea Unit 18k~60K AHU	To Midea's ODU
S2		
CN7	No polarity 2 wires of Wire Controler	Midea supply
CN13	Wi-Fi port (connect smart port)	
CN14	Reserve with 4 wires wire controler	
X.Y.E.	Central Contol/BACnet (controler from 3rd party	
CN2	Remote Control (default with jumper shorten)-output	
24 Volt		
L1	Power	
L2		
R	24 V Power Connection 24 V COMM	
C		
L	ODU Malfunction Indicator (output to Thermostat or Identification	
G	Fan Control	
Y1	HEAT/COOL Low Demand	
Y/Y2	HEAT/COOL High Demand	
B	Heating Reverse Valve	
W	Heat Pump	
W1	Stage 1 Electric Heating	
W2	Stage 1 Electric Heating	
E/AUX	Auxiliary Heater (Emergency Heating)	
DH/BK	Dehumidify (Low Frequency and Low Fan)	

Step 6 - Communication Wiring Connections - Dip Switch Configuration

⚠ WARNING

Please refer to the wiring nameplate for the wiring method. Do not connect 24 V AC to S1 -S2, as this will damage the system.

⚠ CAUTION

There are two options available to establish communication between the outdoor unit and the approved indoor unit.

Table 6-1: Communication Wiring Sizes

Option	Communication Type	Reocommended Cable Size
1	Non-Polarity RS485 Communication (S1 - S2)	20 AWG (stranded shielded)
2	24 V communication	18 AWG 8 conductor thermostat wire

⚠ WARNING

EQUIPMENT DAMAGE HAZARD

Failure to follow this caution may result in equipment damage or improper operation. Wires should be sized based on NEDC and local codes.



NOTE

- Do not use the thermostat wire for any RS-485 connection between indoor and outdoor units.
- All connections between the indoor and outdoor units must be made as shown in Fig. 5-3

Power needs to be OFF before dip switch adjustments.

⚠ CAUTION

EQUIPMENT DAMAGE HAZARD

Failure to follow this caution may result in equipment damage or improper operation. Be sure to comply with local codes while running wire from the indoor unit to the outdoor unit. Every wire must be connected firmly. Loose wiring may cause the terminal to overheat or result in unit malfunction. A fire hazard may also exist. Ensure all wiring is tightly connected.



No wire should touch the refrigerant tubing, compressor or any moving parts. Disconnecting means must be provided and shall be located within sight and readily accessible from the air conditioner. Connecting cable with conduit shall be routed through the hole in the conduit panel.

Table 6-2: Wiring Color Guide

THERMOSTAT				INDOOR UNIT	OUTDOOR UNIT
Heat - 2nd stage	W2	WHITE	→	W2	→ N/C
Emergency Heat - 1st stage	W1/E	BLACK	→	W1	→ D
		N/C		E	
		N/C		W	W
4 Way Valve	B	ORANGE	→	B	→ B
Cool - 2nd stage	Y2	BROWN	→	Y2	→ Y2
Cool - 1st stage	Y	YELLOW	→	Y	→ Y
Fan	G	GREEN	→	G	→ G
	L	GRAY	→	L	→ L
Power Common	C	BLUE	→	C	→ C
Power	R	RED	→	R	→ R
	DH	PURPLE	→	DH	→ N/C

Table 6-3: Outdoor Unit DIP Switch Settings

Press the SW4 button for 10 seconds for force defrosting.

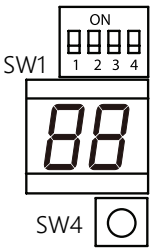

NO.	Dial Code	Features	ON	OFF
1	SW1-1	Function to be defined		
2	SW1-2	Communication dial code	24 V communication only (no outdoor unit clean function [*]	24 V communication/ 485 communication
3	SW1-3	Strong cold and strong heat function	The cooling/ heating target pressure compensation value is valid	The cooling/ heating target pressure compensation value is invalid
4	SW1-4	Enhanced defrosting function	Enhanced defrosting	Default setting (standard defrost algorithm)

[*] The outdoor unit clean function means reversing the outdoor fan to blow away dust and other debris on the fins.

Scenario 1: EVOX Heat Pump and Air Handler 3rd Party 24 V Thermostat

Matchup	Thermostat	Wiring	AHU SW1	ODU SW
Midea AHU+Midea ODU 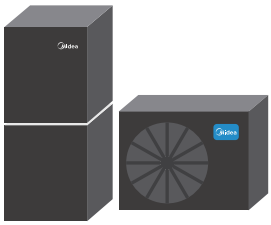	3rd Party 24 V Thermostat 	24 V communication* 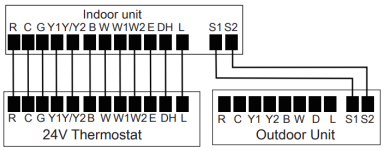	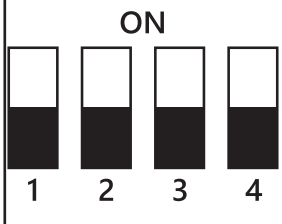	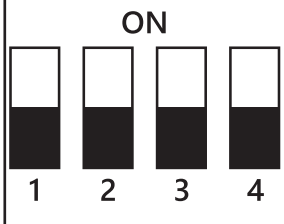

*This is a general wiring diagram. Use the diagram that comes with your selected 24 V thermostat.

Fig. 6-1: Scenario 1 Wiring Diagram and Dip Switch Settings

- The IDU and ODU need separate power. See Step 5 - Power Wiring Connections.
- Bi Communication (IDU SW1-1&-4 and ODU SW-1) auto recognize.
- IDU and ODU need 2 non-polarities (5 V RS485 communication through S1 S2).
- IDU and Thermostat Controller Communicate with 24 VAC signal.
- Existing 24 V thermostat wire maybe used.
- IDU SW1 is factory designed for automatic control recognition (the system automatically identifies a communicating signal or a 24 V signal, the DIP switch is for verification and test purposes).
- When connecting a wired controller and 24 V thermostat, the 24 V signal will take priority.

Scenario 2: EVOX Heat Pump, Air Handler, and RS485 Communication

Matchup	Thermostat	Wiring	AHU SW1	ODU SW
Midea AHU+Midea ODU 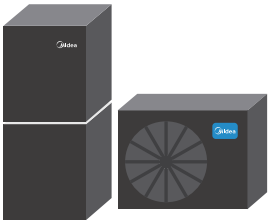	Midea Wired Thermostat 	Non-polarity RS485 communication 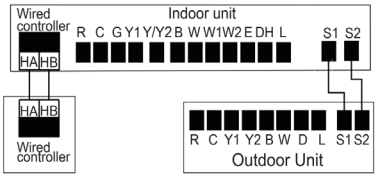	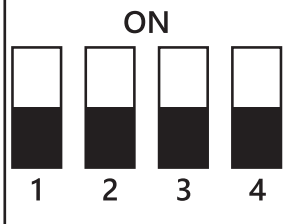	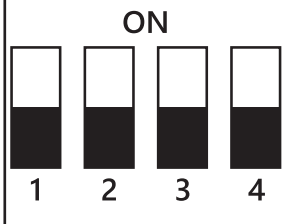

Fig. 6-2: Scenario 2 Wiring Diagram and Dip Switch Settings

- The IDU and ODU need separate power. See Step 5 - Power Wiring Connections.
- IDU and ODU need 2 non-polarity (5 V RS485 S1 and S2 communication)
- IDU and Midea wired controller (HA&HB with 20VDC)

NOTE

Wired Controllers use RS485communication and the connections cannot accept 16 AWG wire.

- Existing 24v thermostat wires maybe used.
- When connecting a wired controller and 24 V thermostat, the 24 V signal will take priority.

Scenario 3: Self-Adapt Mode with 3rd Party Equipment

Matchup	Thermostat	Wiring	AHU SW1	ODU SW
Midea AHU+Brand ODU 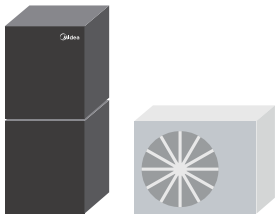	3rd Party 24 V Thermostat 	24 V communication 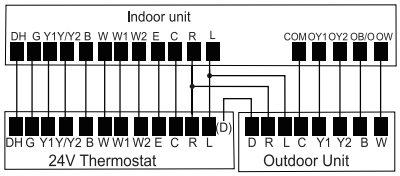	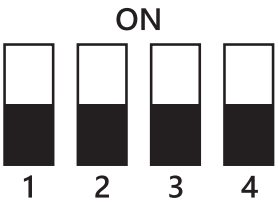	Other Brand Outdoor Unit
Brand AHU+Midea ODU 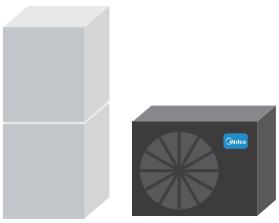	3rd Party 24 V Thermostat 	24 V communication 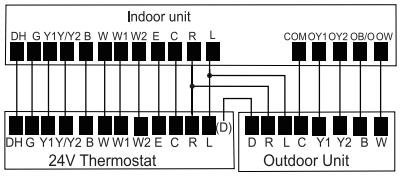	Other Brand Air Handling Unit	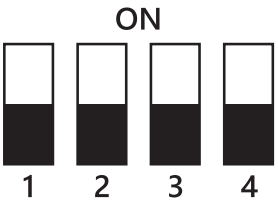

NOTE

For 3rd party equipment and Midea equipment combinations, the 24V wiring connections must be connected to the RDS control and must stop the outdoor unit in case of a refrigerant leak detection.

Fig. 6-3: Scenario 3 Wiring Diagram and Dip Switch Settings

- The IDU and ODU need separate power. See Step 5 - Power Wiring Connections or the 3rd party unit's instructions.
- A 24V signal controls IDU and ODU.

Table 6-4: Electrical Data

MODEL (Btu/h)			18K	24K	30K
POWER (outdoor)		PHASE	1 Phase		
		FREQUENCY AND VOLT	208/230, 60 Hz		
OUTDOOR UNIT		MCA	17A	19A	29.5A
		MOP	20A	20A	30A
LINES GUAGE	OUTDOOR UNIT POWER LINE	LINE QUANTITY	2+Ground		
		LINE DIAMETER(AWG)	12	12	10
	OUTDOOR-INDOOR SIGNAL LINE	LINE QUANTITY	2		
		LINE DIAMETER (AWG)	20		
	THERMOSTAT SIGNAL LINE	LINE QUANTITY	--		
		LINE DIAMETER (AWG)	18		

MODEL (Btu/h)			36K		48K	60K
POWER (outdoor)		PHASE	1 Phase			
		FREQUENCY AND VOLT	208/230, 60 Hz			
OUTDOOR UNIT		MCA	32A	30A	38A	40A
		MOP	35A	30A	40A	40A
LINES GUAGE	OUTDOOR UNIT POWER LINE	LINE QUANTITY	2+Ground			
		LINE DIAMETER (AWG)	10	10	8	8
	OUTDOOR-INDOOR SIGNAL LINE	LINE QUANTITY	2			
		LINE DIAMETER (AWG)	20			
	THERMOSTAT SIGNAL LINE	LINE QUANTITY	--			
		LINE DIAMETER (AWG)	18			

NOTE

Line Diameter Sizing per NFPA 70 (2020), Table 310.15 (B) (16) Based on type NM-B Romex wire.
Other sizing options are possible. Consult NFPA 70 or Licensed Electrician for alternate sizing.

24 V Connection Diagrams

Table 6-5: Terminal Function

Terminal	Location	Function
R	Thermostat/Indoor Unit/Outdoor Unit	24 V Power Connection
C	Thermostat/Indoor Unit/Outdoor Unit	Common
Y1	Thermostat/Indoor Unit/Outdoor Unit	Low Demand
Y2	Thermostat/Indoor Unit/Outdoor Unit	High Demand
B	Thermostat/Indoor Unit/Outdoor Unit	Heating Reversing Valve
W	Thermostat/Indoor Unit/Outdoor Unit	Heating Control
D	Outdoor Unit	Defrost - (24 V output signal)
L	Thermostat/Indoor Unit/Outdoor Unit	System Fault - (24 V output signal)
DH	Thermostat/Indoor Unit	Dehumidification
W1	Thermostat/Indoor Unit	Heating System
W2	Thermostat/Indoor Unit	Second Stage Heating

NOTE

Terminal D is now energized when the outdoor unit goes into defrost mode and can be used to enable electric heat. This feature is unavailable when the outdoor unit communicates with the indoor unit via non-polarity RS485 Communication S1-S2.

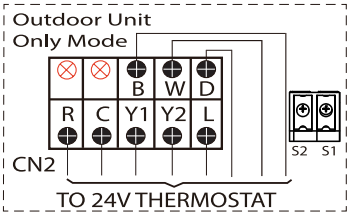

24 V must never be connected to S1 – S2. All wiring must be in compliance with the above scenarios. Incorrect wiring will cause irreversible damage to the control.

Fig. 6-4: Never Connect 24 V to S1-S2

NOTE

Dip switches are located on a compatible indoor unit. Refer to the indoor unit installation manual for additional information. A heat pump thermostat is required for all the following thermostat configurations.

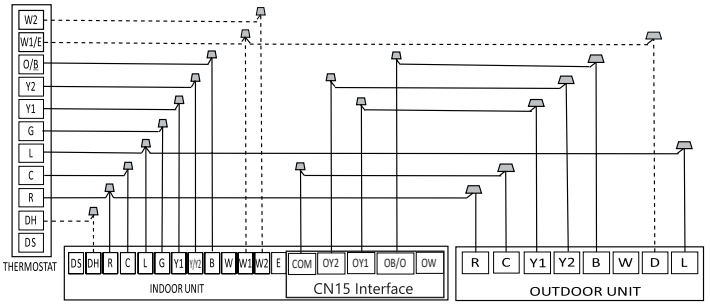

S4-2 Default on, DH function off. Turn switch off to activate DH function.

S4-4 Default on, W1 and W2 shorted for single stage Aux heat operation. Turn off to separate stages.

Fig. 6-5: Wiring for 4H and 2C Thermostat

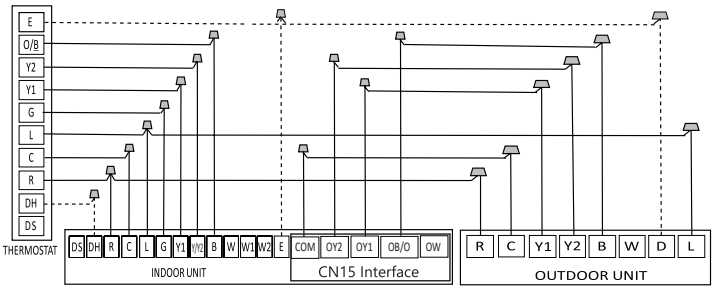

S4-2 Default on, DH function off. Turn switch off to activate DH function.

Emergency heating control two groups of electric heating at the same time

Fig. 6-6: Wiring for 3H and 2C Thermostat

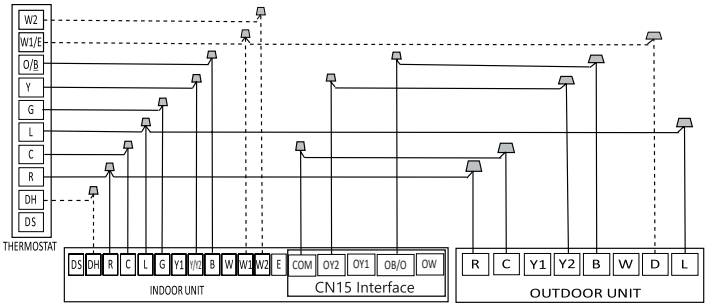

S4-2 Default on, DH function off. Turn switch off to activate DH function.

S4-4 Default on, W1 and W2 shorted for single stage Aux heat operation. Turn off to separate stages.

Fig. 6-7: Wiring for 3H and 1C Thermostat

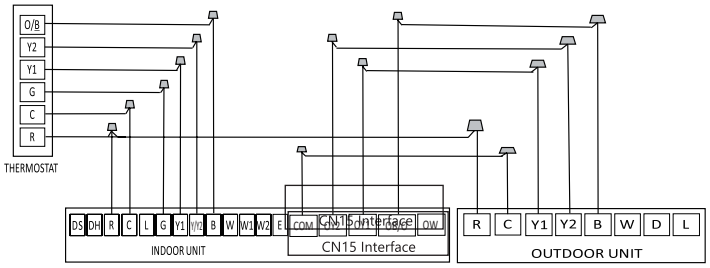

Fig. 6-8: Wiring for 2H and 2C Thermostat No Auxilary Heat

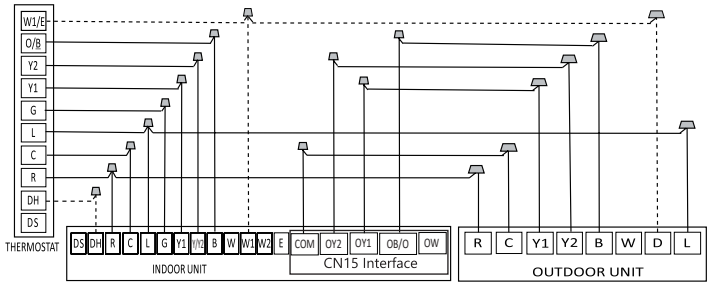

S4-2 Default on, DH function off. Turn switch off to activate DH function.

S4-4 Default on, W1 and W2 shorted for single stage Aux heat operation. Turn off to separate stages.

Fig. 6-9: Wiring for 3H and 2C Thermostat

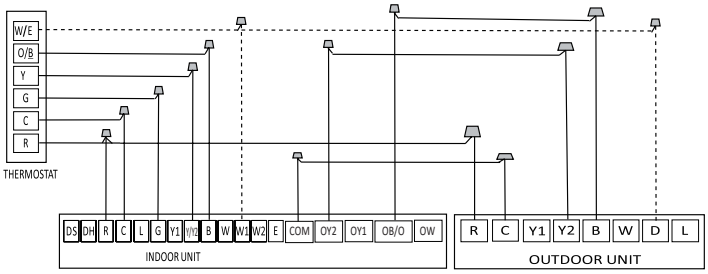

S4-4 Default on, W1 and W2 shorted for single stage Aux heat operation. Turn off to separate stages.

Fig. 6-10: Wiring for 2H and 1C Thermostat

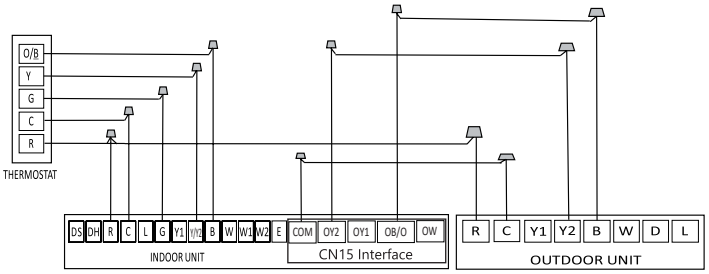

Fig. 6-11: Wiring for 1H and 1C Thermostat

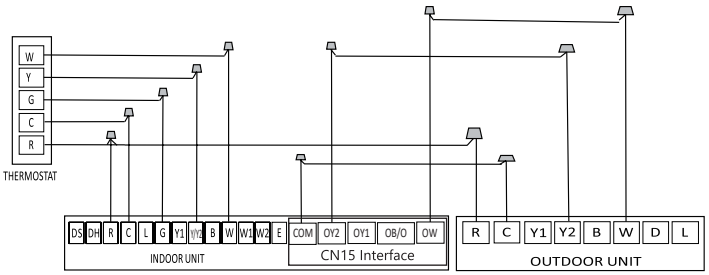

Fig. 6-12: Wiring for 1H and 1C Thermostat

NOTE

This is the least preferred method of control wiring and should only be used in emergencies. It may not achieve full capacity.

NOTE

If the outdoor condensing unit initiates defrost cycles frequently, then it is recommended to adjust the "thermal balance point" to a temperature that would decrease the recurrence of these cycles and prevent cold air from blowing during the duration of the defrost cycle. The thermal balance point is the outdoor ambient temperature at which the heat pump can no longer provide sufficient heating to the space on its own and compromises the reliability of the compressor.

Step 7 - Air Evacuation

NOTE

When opening valve stems, turn the hexagonal wrench until it hits the stopper. Do not try to force the valve to open further.

Open valves slowly until you hear refrigerant, and allow pressure to equalize before opening fully. Open the large vapor line valve first.

PREPARATIONS AND PRECAUTIONS

Air and foreign matter in the refrigerant circuit can cause abnormal rises in pressure, which can damage the air conditioner, reduce its efficiency, and cause injury. Use a vacuum pump and manifold gauge to evacuate the refrigerant circuit, removing any non-condensable gas and moisture from the system. Evacuation should be performed upon initial installation and when the unit is relocated.

BEFORE PERFORMING EVACUATION

- Check to make sure the connective pipes between the indoor and outdoor units are connected properly.
- Check to make sure all wiring is connected properly.

Evacuation Instructions

1. Connect the charge hose of the manifold gauge to the service port on the outdoor unit's low pressure valve.
2. Connect another charge hose from the manifold gauge to the vacuum pump.
3. Open the Low-Pressure side of the manifold gauge. Keep the High-Pressure side closed.
4. Tighten refrigerant valve caps hand-tight plus flat to ensure there are no vacuum leaks.
5. Turn on the vacuum 5 to evacuate the system.

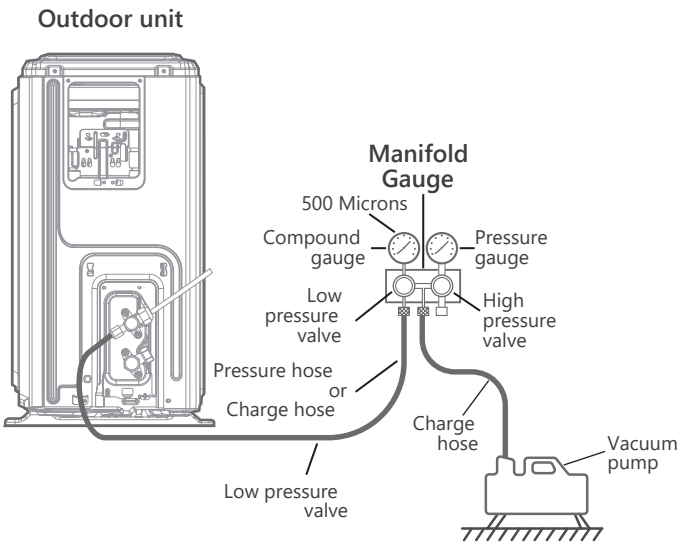

Fig. 7-1: Manifold Gauge Arrangement

6. Run the vacuum for at least 15 minutes, or until the Compound Meter reads 500 microns.
7. Close the Low-Pressure side of the manifold gauge and turn off the vacuum pump.
8. Wait for 5 minutes, then check that there has been no change in system pressure.
9. If there is a change in system pressure, refer to the Gas Leak Check section for information on how to check for leaks. If there is no change in system pressure, unscrew the cap from the packed valve (high-pressure valve).
10. Insert a hexagonal wrench into the packed valve (high-pressure valve) and open the valve by turning the wrench in a 1/4 counterclockwise turn. Listen for gas to exit the system, then close the valve after 5 seconds.
11. Watch the Pressure Gauge for one minute to make sure that there is no change in pressure. The Pressure Gauge should read slightly higher than atmospheric pressure.
12. Remove the charge hose from the service port.

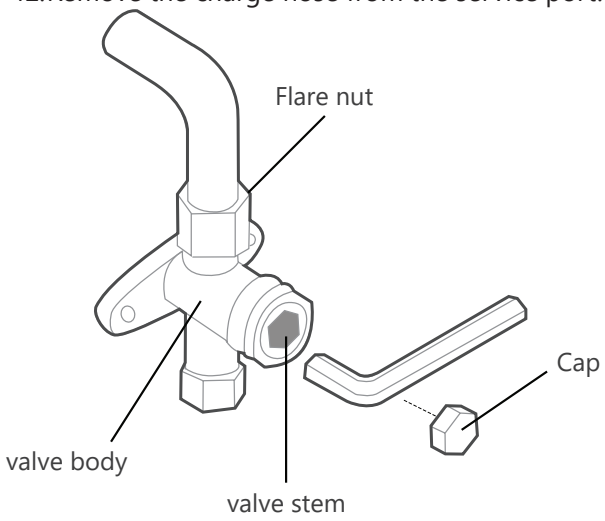

Fig. 7-2: Service Valve

13. Using a hexagonal wrench, fully open both the high-pressure and low-pressure valves.
14. Tighten all valve caps hand-tight plus one flat to ensure no leaks. You may tighten it further using a torque wrench if needed.

⚠ CAUTION

NOTE ON ADDING REFRIGERANT

DO NOT mix refrigerant types.

Some systems require additional charging depending on pipe lengths. In North America, the standard pipe length is 25 ft. (7.5 m). The refrigerant should be charged from the service port on the outdoor unit's low-pressure valve. The additional refrigerant to be charged can be calculated using the following formula:

Table 7-1: Additional Refrigerant Formula

Refrigerant Type: R454B	**Liquid Side Diameter**
	⌀3/8 in. (⌀9.52 mm)
(orifice tube in the Indoor Unit):	(Total Pipe length - standard pipe length) x65 (0.7) [oz./ft. (g/m)]
(orifice tube in the outdoor unit):	(Total pipe length - standard pipe length) ×30 (0.32) [oz./ft. (g/m)]

Start-Up

⚠ CAUTION

Failure to perform the test run may result in unit damage, property damage, or personal injury.

Before the Test Run

A test run must be performed after the entire system has been completely installed. Confirm the following points before performing the test:

a. Indoor and outdoor units are properly installed.
b. Piping and wiring are properly connected.
c. No obstacles near the inlet and outlet of the unit that might cause poor performance or product malfunction.
d. The refrigeration system does not leak.
e. The drainage system is unimpeded and draining to a safe location.
f. Heating insulation is properly installed.
g. Grounding wires are properly connected.
h. Length of the piping and additional refrigerant capacity have been recorded.
i. Power voltage is the correct voltage for the air conditioner

Test run Instructions

1. Open both the liquid and gas service valves.
2. Turn on the main power switch and allow the unit to warm up.
3. Set the air conditioner to COOL mode.
4. For the Indoor Unit
   a. Double-check to see if the room temperature is being registered correctly.
   b. Check to see that the drainage system is unimpeded and draining smoothly.
   c. Ensure there is no vibration or abnormal noise during operation.
5. For the Outdoor Unit
   a. Check to see if the refrigeration system is leaking.
   b. Make sure there is no vibration or abnormal noise during operation.
   c. Ensure the wind, noise, and water generated by the unit do not disturb your neighbors or pose a safety hazard.
6. Drainage Test
   a. Ensure the drainpipe flows smoothly. New buildings should perform this test before finishing the ceiling.
   b. Turn on the main power switch and run the air conditioner in COOL mode.
   c. Check to see that the water is discharged. It may take up to one minute before the unit begins to drain depending on the drainpipe.
   d. Make sure that there are no leaks in any of the piping.
   e. Stop the air conditioner. Turn off the main power switch and reinstall the test cover.

NOTE

If the unit malfunctions or does not operate according to your expectations, please refer to the Troubleshooting section of the Service Manual before calling customer service.

Care and Maintenance

To help ensure high performance and minimize possible equipment failure, periodic maintenance must be performed on this equipment. Maintenance frequency may vary depending on geographic areas.

Troubleshooting

For ease of service, the systems are equipped with diagnostic code display LEDs on the indoor and outdoor units. The outdoor diagnostic display has two LEDs (Red and Green) on the outdoor unit board and is limited to very few errors. The indoor diagnostic display is a combination of flashing LEDs on the display panel or the front of the unit.

There may be a few error codes displayed in the indoor unit that might relate to the outdoor unit's problems. If possible, always check the diagnostic codes displayed on the indoor unit first.

Appendix

Outdoor Unit Diagnostic Guide

For ease of service, systems are equipped with diagnostic code display LEDs on the indoor and outdoor units. Outdoor diagnostic is displayed on the outdoor unit microprocessor board. There may be a few error codes displayed in the indoor unit that might relate to the outdoor unit's problems. If possible, always check the diagnostic codes displayed on the indoor unit first. The diagnostic codes displayed on the outdoor units are listed in
Table AP-1.

Table AP-1: Outdoor Unit Diagnostic Codes

Display	Error Information	Display	Error Information
EC 5C	High-pressure sensor failure	PC 0F	PFC module protection
EC 57	Refrigerant pipe temperature sensor error	PC 0L	Low-temperature protection of outdoor unit
EL 01	Communication malfunction between indoor and outdoor units	PC 10	Outdoor unit low AC voltage protection
EC 50	Outdoor temperature sensor error	PC 11	Outdoor unit main control board DC bus high voltage protection
EC 51	Outdoor EEPROM error	PC 12	Outdoor unit main control board DC bus high voltage protection /341 MCE error
EC 52	Condenser coil temperature sensor (T3) malfunction	PC 30	System high-pressure protection
EC 53	Outdoor ambient temperature sensor (T4) malfunction	PC 31	System low-pressure protection
EC 54	Compressor discharge temperature sensor TP has an open or short circuit	PC 40	Communication error between the outdoor main chip and compressor-driven chip
EC 07	Outdoor DC fan motor malfunction/fan speed out of control	PC 42	Compressor start failure of outdoor unit
EC 71	Over-current failure of outdoor DC fan motor	PC 43	Outdoor compressor lack phase protection
EC 72	Lack phase failure of outdoor DC fan motor	PC 44	Outdoor unit zero-speed protection
EL 16	Communication malfunction between the outdoor unit main board and the outdoor transit board	PC 45	Outdoor unit IR chip drive failure
PC 00	Inverter module (IPM) protection	PC 46	Compressor speed has been out of control
PC 02	Top temperature protection of compressor	PC 49	Compressor overcurrent failure
PC 06	Discharge temperature protection of compressor	PH 90	High-temperature protection of Evaporator
PC 08	Outdoor overcurrent protection	PH 91	Low-temperature protection of Evaporator
PC 0A	High-temperature protection of condenser	LC 06	High-temperature protection of Inverter module (IPM)

NOTE

It is normal to display DF or FC, not a malfunction. For additional diagnostic information, refer to the service manual.

For AHRI rating certificates, refer to the AHRI directory http://www.ahridirectory.org.
The design and specifications are subject to change without prior notice for product improvement. Consult with the sales agency or manufacturer for details. Any updates to the manual will be uploaded to the service website, please check for the latest version.

Important!
Product Warranty Information

The Warranty Registration below is a requirement to print a warranty certificate. You're not mandated to register your products to enjoy the Midea Standard Warranty; however, registration is highly recommended. Registering your warranty within 60 days ensures easy access to support and service when needed.

The design and specifications may change without prior notice in order to enhance the product. For detailed information, please consult your sales agency or the manufacturer. Any updates to the manual will be posted on the service website, so be sure to check for the latest version.

United States

https://www.mideacomfort.us/registration.html

Canada

https://www.mideacomfortna.ca/registration.html

EVOX Extreme Heat Pump IM Rev. 7 05212026
©2026 Midea All Rights Reserved