R454b
Refrigerant

# SUBMITTAL DATA SHEET

Series Name: Value Tier - INFINI Series
Model Number: MSGNS-H12B-2A/MO1BS-H12B-2A

Midea

| High Wall Mini Split Heat Pump System | |
|---|---|
| Location: | Approval: |
| Engineer: | Date: |
| Submitted to: | Construction: |
| Submitted by: | Unit #: |
| Reference: | Drawing #: |



| INDOOR SPECIFICATION | | |
|---|---|---|
| Indoor Air Flow (Turbo/H/M/L/Si) (CFM) | | 347 / 294 / 194 / 153 / 153 |
| Indoor Noise Level (Turbo/H/M/L/Si) (dBA) | | 46 / 41 / 35 / 24 / 18.5 |
| Dimension (W×D×H) | inch | 32-7/8 x 8-1/4 x 11-5/8 |
| | mm | 835 × 208 × 295 |
| Package (W×D×H) | inch | 34.45 x 11.22 x 14.96 |
| | mm | 875 × 285 × 380 |
| Net/Gross Weight | lbs | 19/25 |
| | kg | 8.6/11.4 |

| OUTDOOR SPECIFICATION | | |
|---|---|---|
| Compressor Type | | ROTARY |
| Compressor Model | | KSN98D64UFZ3 |
| Refrigerant | | R454B |
| Refrigerant Oil Charge(mL) | | 300 |
| Refrigerant Oil | | VG74 |
| Outdoor Air Flow (Max) (CFM) | | 1,235 |
| Outdoor Noise Level (dBA) | | 53 |
| Dimension (W×D×H) | inch | 30-1/8 x 11-7/8 x 21-7/8 |
| | mm | 765 × 303 × 555 |
| Package (W×D×H) | inch | 34-7/8 x 13-1/4 x 24 |
| | mm | 887 × 337 × 610 |
| Net/Gross Weight | lbs | 59/64 |
| | kg | 26.8/29.2 |

| EFFICIENCY | | | |
|---|---|---|---|
| Cooling | | Heating | |
| SEER2 | 21.3 | HSPF2-4 | 9.2 |
| EER2 | 10.8 | COP | 3.34 |

| ELECTRICAL | |
|---|---|
| Power Supply | 208/230V,60Hz,1Ph |
| System MCA | 13.0 |
| Connection Wiring | AWG 14/4 |
| System MOCP | 15.0 |
| Compressor RLA | 7.5 |
| Outdoor Fan Motor RLA | 0.4 |
| Outdoor Fan Motor W | 34 |
| Indoor Fan Motor RLA | 0.4 |
| Indoor Fan Motor W | 30 |
| System Power Input @ Cooling (W) | 1,110 (220 ~ 1,430) |
| System Power Input @ Heating (W) | 1,050 (240 ~1,310) |
| **MCA**: Min. circuit amps (A) | **MOCP**: Max. over current protection (A) |
| **RLA:** Rated load amps (A) | **W:** Fan motor rated output (W) |

| PERFORMANCE of Cooling | |
|---|---|
| Cooling (Btu/hr) | |
| Rated Capacity | 12,000 |
| Min/Max Capacity | 2,700~13,800 |
| Moisture Removal(L/h) | 1.4 |
| Standard Operating Range(°F/°C) | -13~122 (-25 ~ 50) |
| Conditions: | Indoor: 80°F DB/67°F WB |
| | Outdoor: 95°F DB/75°F WB |

| PERFORMANCE of Heating | |
|---|---|
| Heating (Btu/hr) | |
| 1. @ 47°F Rated | 12,000 |
| 1. @ 47°F Min/Max Capacity | 4,200~14,100 |
| 2. @ 17°F Rated | 8,300 |
| 3. @ 5°F Rated: Capacity / COP | 8,000 / 1.80 |
| 3. @ 5°F Max: Capacity | 8,000 |
| Standard Operating Range(°F/°C) | -13~75 (-25 ~ 24) |
| 1. Conditions: | Indoor: 70°F DB/60°F WB |
| | Outdoor: 47°F DB/43°F WB |
| 2. Conditions: | Indoor: 70°F DB/60°F WB |
| | Outdoor: 17°F DB/15°F WB |
| 3. Conditions | Indoor: 70°F DB/60°F WB |
| | Outdoor: 5°F DB/5°F WB |

| PIPING | |
|---|---|
| Throttle type(Indoor) | N/A |
| Throttle type(Outdoor) | Capillary |
| Liquid Size | 1/4" (6.35mm) |
| Gas Size | 3/8" (9.52mm) |
| Max. Piping Length(ft/m) | 82 (25) |
| Max. Height Difference(ft/m) | 49 (15) |
| Max. Pre-charged Length(ft/m) | 25 (7.5) |
| Refrigerant Pre-charged Amount(oz/g) | 25 (0.7) |
| Additional Charge of Refrigerant((oz/ft)/(g/r | 0.16 (15) |
| Connection Method | Flared |
| | |

## Indoor Unit Dimension

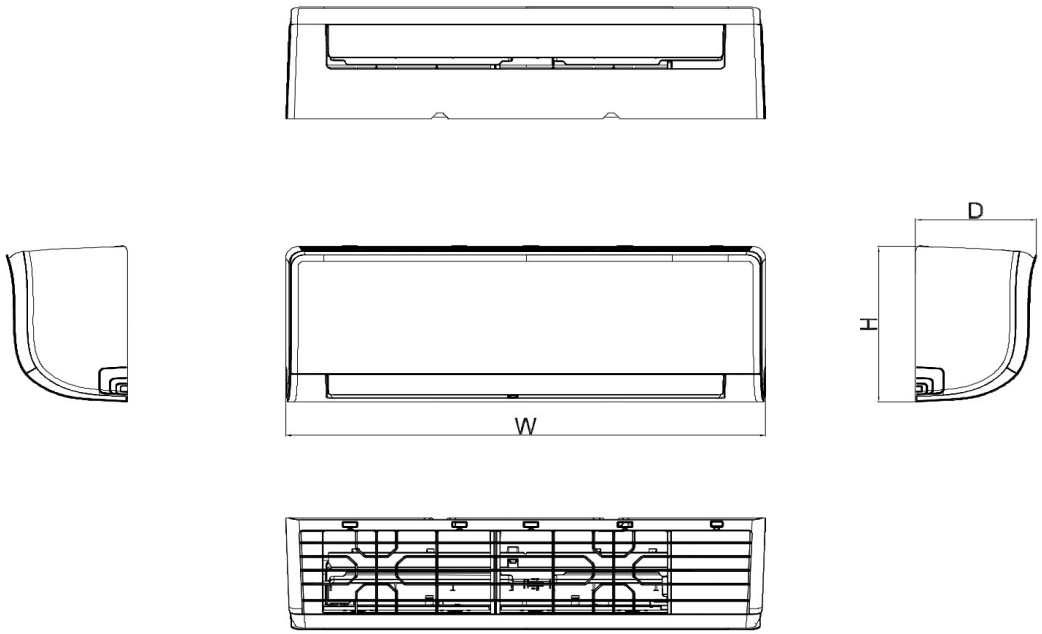


| Capacity | Body Code | Unit | W | D | H |
|---|---|---|---|---|---|
| 9k | A | mm | 726 | 210 | 291 |
| | | inch | 28-5/8 | 8-1/4 | 11-1/2 |
| 12k | B | mm | 835 | 208 | 295 |
| | | inch | 32-7/8 | 8-1/4 | 11-5/8 |
| 18k | C | mm | 969 | 241 | 320 |
| | | inch | 38-1/8 | 9-1/2 | 12-5/8 |
| 24k | D | mm | 1083 | 244 | 336 |
| | | inch | 42-5/8 | 9-5/8 | 13-1/4 |
| 30k~36k | F | mm | 1259 | 283 | 362 |
| | | inch | 49-5/8 | 11-1/8 | 14-1/4 |

## Installation Instruction

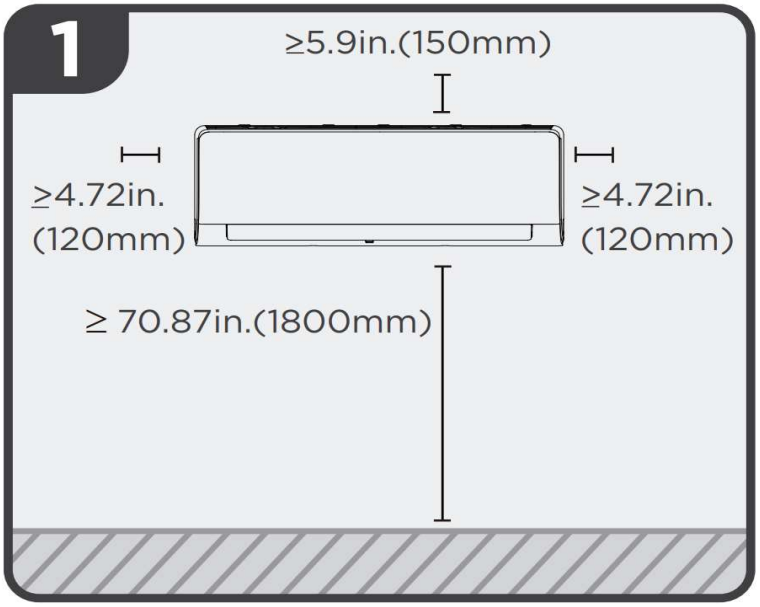


Select Installation Location

## Outdoor Unit Dimension

Unit: inch (mm)

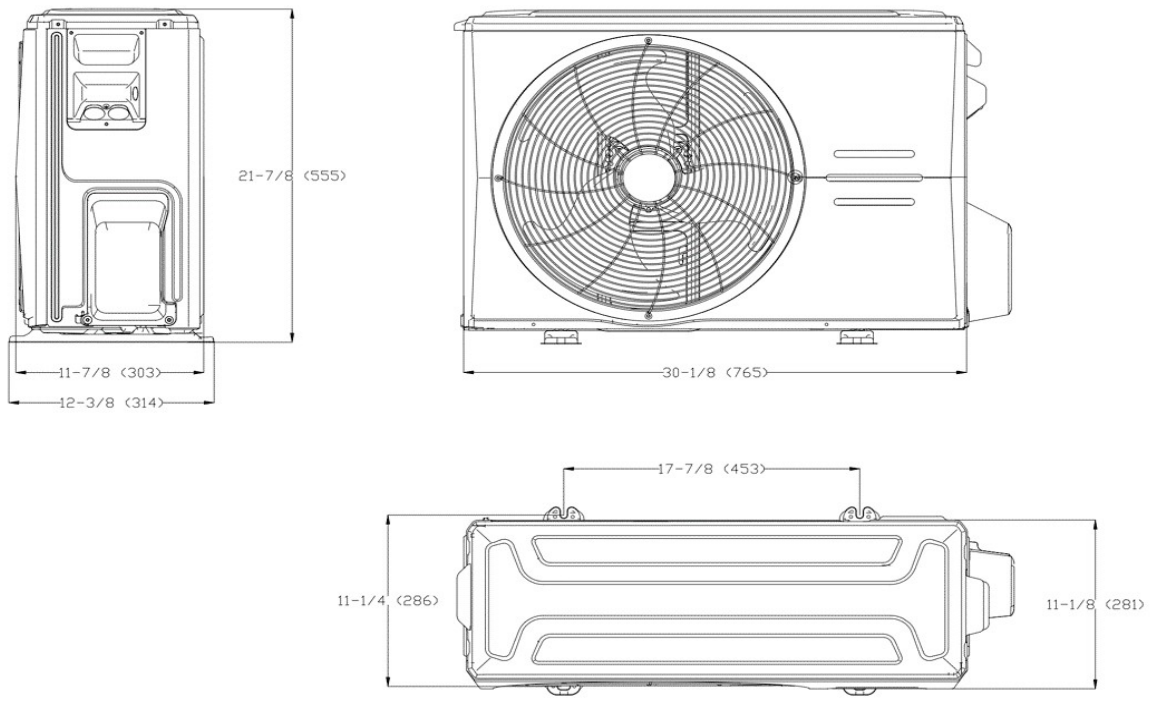


## Installation Instruction

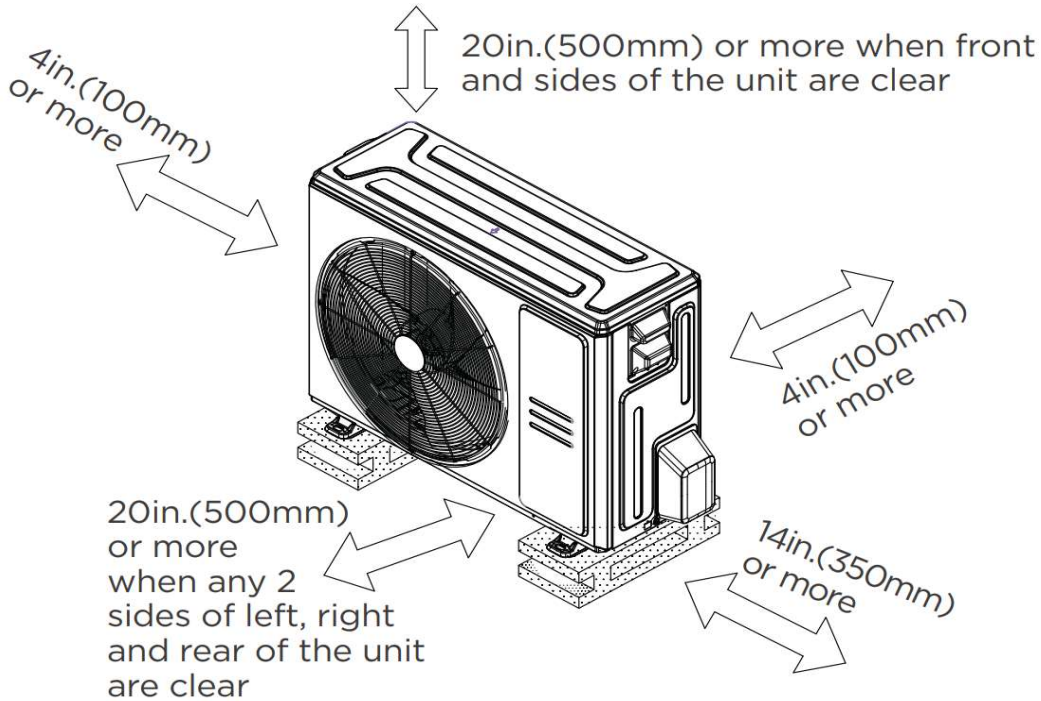

## FEATURES

- Indoor unit: TU1 copper coil
- 1~100% fan speed setting
- WiFi capability: through WiFi dongle or wired controller with built-in Wi-Fi
- OTA(by using Wi-Fi dongle)
- Multiple control options available:
  - Two-way communication wired controller with built-in Wi-Fi:120N(X6W)
  - Midea Smart Thermostat : MTL04-1
  - Wireless remote controller RG10 (Built-In)
  - Third-Party 24V Thermostat*

*Midea 24V Mini Interface Kit (17222000A68532) is required.