R454b
Refrigerant

SUBMITTAL DATA SHEET

Series Name: Value Tier - INFINI Series
Model Number: MSGNS-H24B-2A/MO1BS-H24B-2A

Midea

High Wall Mini Split Heat Pump System	
Location:	Approval:
Engineer:	Date:
Submitted to:	Construction:
Submitted by:	Unit #:
Reference:	Drawing #:



INDOOR SPECIFICATION		
Indoor Air Flow (Turbo/H/M/L/Si) (CFM)		730 / 547 / 400 / 330 / 330
Indoor Noise Level (Turbo/H/M/L/Si) (dBA)		54 / 46 / 41 / 28 / 22
Dimension (W×D×H)	inch	42-5/8 x 9-5/8 x 13-1/4
	mm	1,083 × 244 × 336
Package (W×D×H)	inch	45-1/2 x 16-3/8 x 12-3/8
	mm	1,155 × 415 × 315
Net/Gross Weight	lbs	31/40
	kg	13.9/18.0

OUTDOOR SPECIFICATION		
Compressor Type		TWIN-ROTARY
Compressor Model		KTM240D46UKT2
Refrigerant		R454B
Refrigerant Oil Charge(mL)		620
Refrigerant Oil		VG74
Outdoor Air Flow (Max) (CFM)		1,765
Outdoor Noise Level (dBA)		62
Dimension (W×D×H)	inch	35 x 13-1/2 x 26-1/2
	mm	890 × 342 × 673
Package (W×D×H)	inch	39-1/8 x 15-5/8 x 29-1/8
	mm	995 × 398 × 740
Net/Gross Weight	lbs	95/102
	kg	42.9/46.4

EFFICIENCY			
Cooling		Heating	
SEER2	18.5	HSPF2-4	9
EER2	9.6	COP	3.22

ELECTRICAL	
Power Supply	208/230V,60Hz,1Ph
System MCA	19
Connection Wiring	AWG 14/4
System MOCP	20.0
Compressor RLA	13.8
Outdoor Fan Motor RLA	0.8
Outdoor Fan Motor W	80
Indoor Fan Motor RLA	0.6
Indoor Fan Motor W	58
System Power Input @ Cooling (W)	2,500 (290 ~ 2,630)
System Power Input @ Heating (W)	2,180 (970 ~2,770)
MCA: Min. circuit amps (A)	**MOCP**: Max. over current protection (A)
RLA: Rated load amps (A)	**W:** Fan motor rated output (W)

PERFORMANCE of Cooling	
Cooling (Btu/hr)	
Rated Capacity	24,000
Min/Max Capacity	6,200~24,700
Moisture Removal(L/h)	3.0
Standard Operating Range(°F/°C)	-13~122 (-25 ~ 50)
Conditions:	Indoor: 80°F DB/67°F WB
	Outdoor: 95°F DB/75°F WB

PERFORMANCE of Heating	
Heating (Btu/hr)	
1. @ 47°F Rated	24,000
1. @ 47°F Min/Max Capacity	11,900~27,200
2. @ 17°F Rated	17,200
3. @ 5°F Rated: Capacity / COP	17,000 / 2.11
3. @ 5°F Max: Capacity	17,000
Standard Operating Range(°F/°C)	-13~75 (-25 ~ 24)
1. Conditions:	Indoor: 70°F DB/60°F WB
	Outdoor: 47°F DB/43°F WB
2. Conditions:	Indoor: 70°F DB/60°F WB
	Outdoor: 17°F DB/15°F WB
3. Conditions	Indoor: 70°F DB/60°F WB
	Outdoor: 5°F DB/5°F WB

PIPING	
Throttle type(Indoor)	N/A
Throttle type(Outdoor)	Throttle valve
Liquid Size	3/8" (9.52mm)
Gas Size	5/8" (15.9mm)
Max. Piping Length(ft/m)	164 (50)
Max. Height Difference(ft/m)	82 (25)
Max. Pre-charged Length(ft/m)	25 (7.5)
Refrigerant Pre-charged Amount(oz/g)	54 (1.52)
Additional Charge of Refrigerant((oz/ft)/(g/r	0.32 (30)
Connection Method	Flared

Indoor Unit Dimension

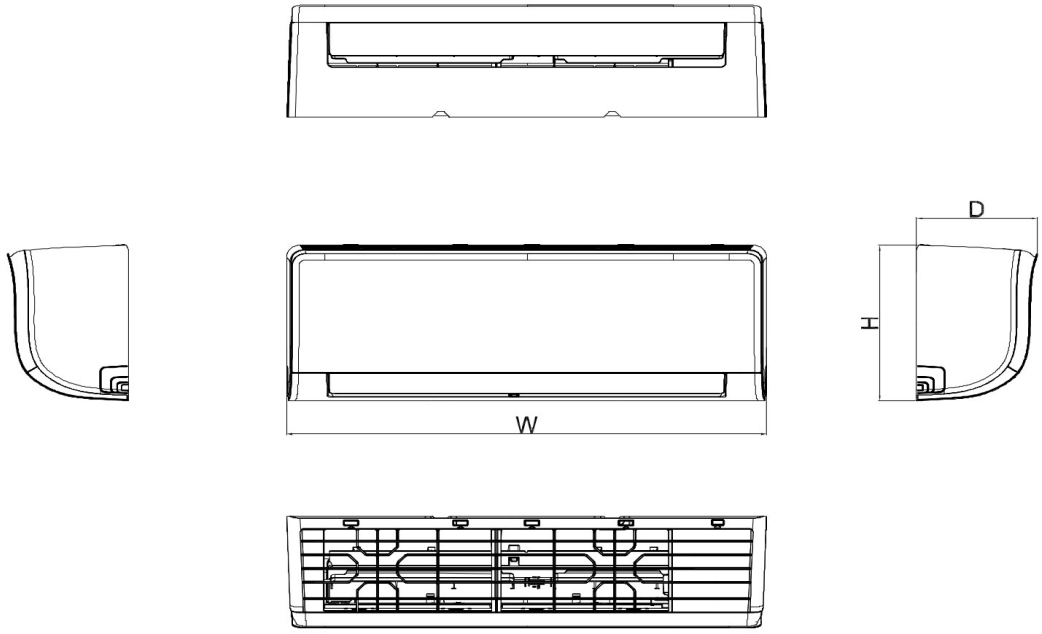

Capacity	Body Code	Unit	W	D	H
9k	A	mm	726	210	291
		inch	28-5/8	8-1/4	11-1/2
12k	B	mm	835	208	295
		inch	32-7/8	8-1/4	11-5/8
18k	C	mm	969	241	320
		inch	38-1/8	9-1/2	12-5/8
24k	D	mm	1083	244	336
		inch	42-5/8	9-5/8	13-1/4
30k~36k	F	mm	1259	283	362
		inch	49-5/8	11-1/8	14-1/4

Installation Instruction

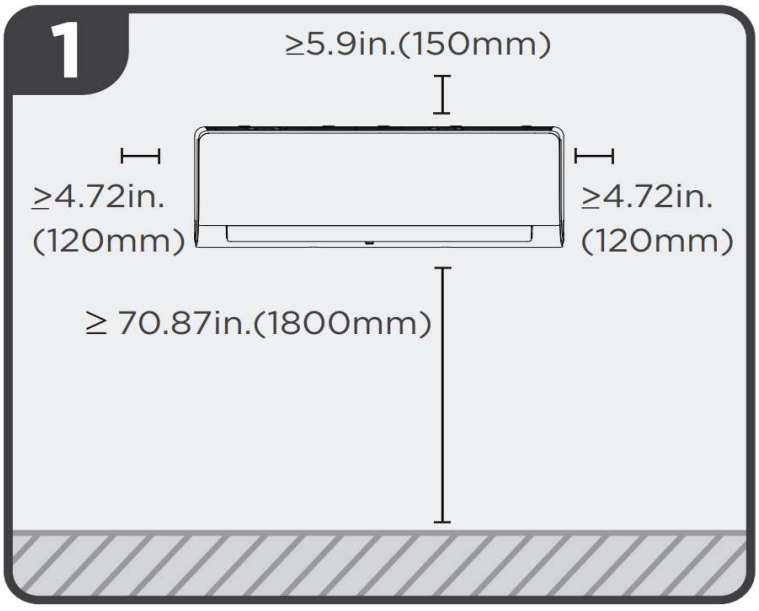

Select Installation Location

Outdoor Unit Dimension

Unit: inch (mm)

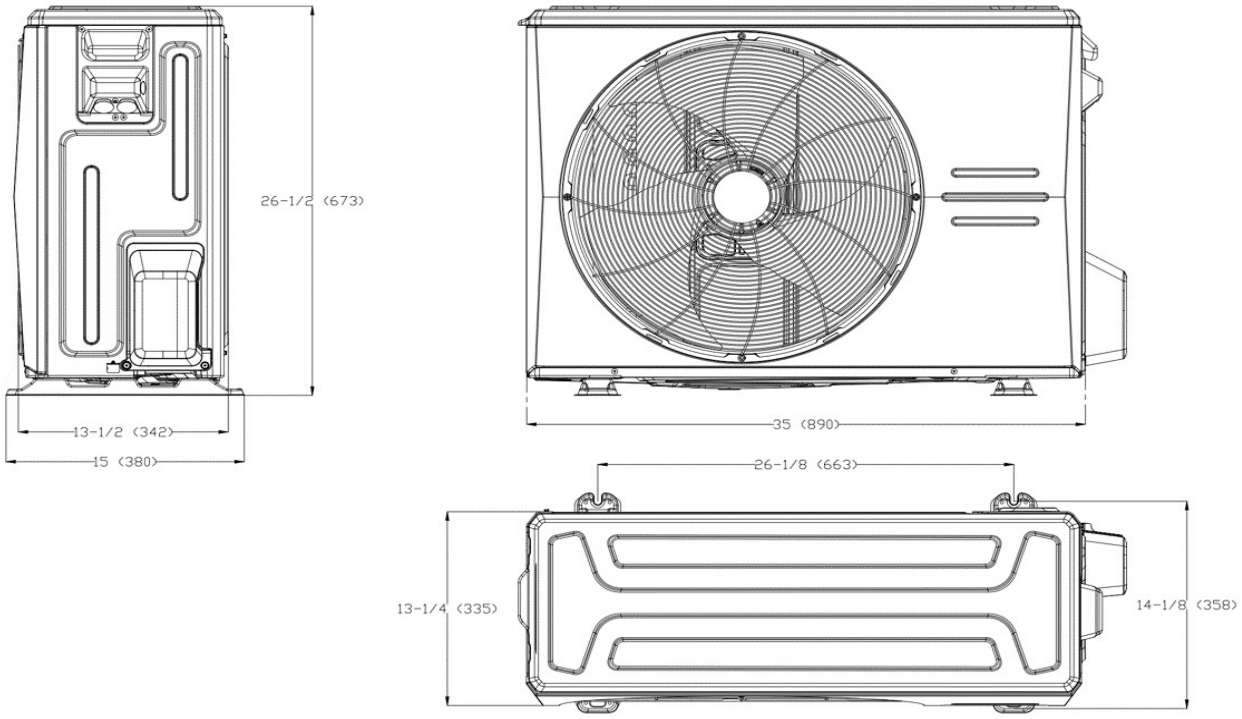

Installation Instruction

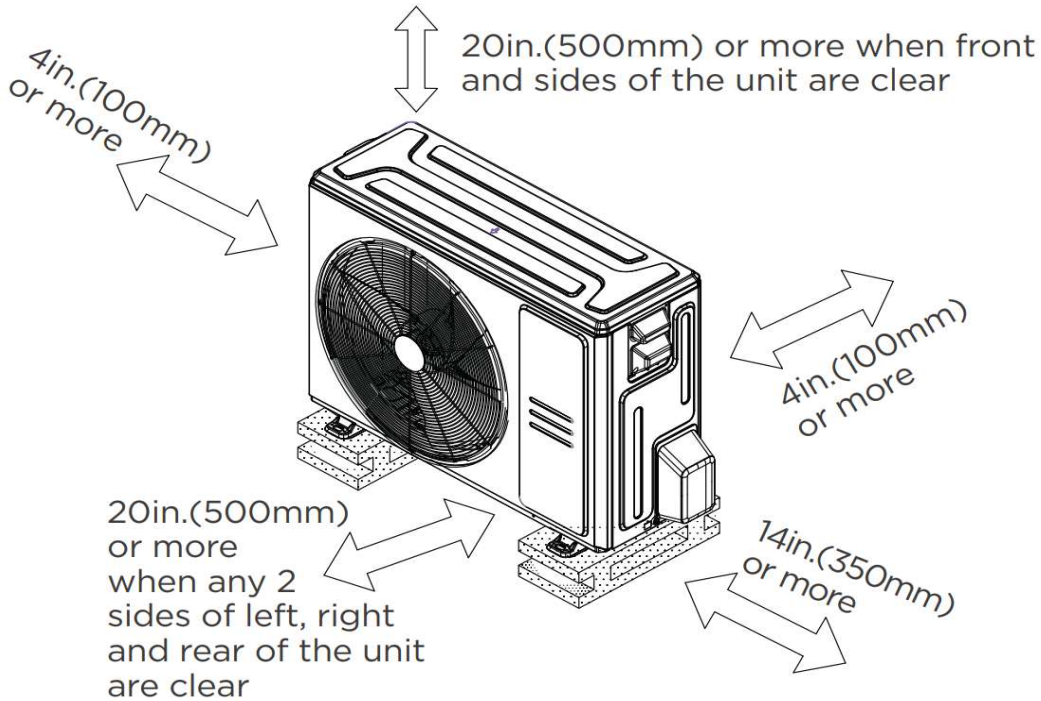

FEATURES

- Indoor unit: TU1 copper coil
- 1~100% fan speed setting
- WiFi capability: through WiFi dongle or wired controller with built-in Wi-Fi
- OTA(by using Wi-Fi dongle)
- Multiple control options available:
  - Two-way communication wired controller with built-in Wi-Fi:120N(X6W)
  - Midea Smart Thermostat : MTL04-1
  - Wireless remote controller RG10 (Built-In)
  - Third-Party 24V Thermostat*

*Midea 24V Mini Interface Kit (17222000A68532) is required.