R454b
Refrigerant

SUBMITTAL DATA SHEET

Series Name: Value Tier - INFINI Series
Model Number: MSGNS-H30B-2A/MO1BS-H30B-2A

Midea

High Wall Mini Split Heat Pump System	
Location:	Approval:
Engineer:	Date:
Submitted to:	Construction:
Submitted by:	Unit #:
Reference:	Drawing #:



INDOOR SPECIFICATION		
Indoor Air Flow (Turbo/H/M/L/Si) (CFM)		871 / 648 / 447 / 330 / 330
Indoor Noise Level (Turbo/H/M/L/Si) (dBA)		56.5 / 52 / 45 / 36 / 22
Dimension (W×D×H)	inch	49-5/8 x 11-1/8 x 14-1/4
	mm	1,259 × 283 × 362
Package (W×D×H)	inch	52-3/4 x 17-3/4 x 15-1/8
	mm	1,340 × 450 × 385
Net/Gross Weight	lbs	43/57
	kg	19.7/25.8

OUTDOOR SPECIFICATION		
Compressor Type		TWIN-ROTARY
Compressor Model		KTF250D22UMT
Refrigerant		R454B
Refrigerant Oil Charge(mL)		670
Refrigerant Oil		VG74
Outdoor Air Flow (Max) (CFM)		2,235
Outdoor Noise Level (dBA)		61.5
Dimension (W×D×H)	inch	37-1/4 x 16-1/8 x 31-7/8
	mm	946 × 410 × 810
Package (W×D×H)	inch	42-7/8 x 19-5/8 x 34-7/8
	mm	1,090 × 500 × 885
Net/Gross Weight	lbs	143/155
	kg	64.8/70.1

EFFICIENCY			
Cooling		Heating	
SEER2	22.3	HSPF2-4	9.0
EER2	12.0	COP	3.0

ELECTRICAL	
Power Supply	208/230V,60Hz,1Ph
System MCA	28.0
Connection Wiring	AWG 14/4
System MOCP	30.0
Compressor RLA	17.5
Outdoor Fan Motor RLA	1.3
Outdoor Fan Motor W	120
Indoor Fan Motor RLA	0.7
Indoor Fan Motor W	58
System Power Input @ Cooling (W)	2,500 (700 ~ 3,220)
System Power Input @ Heating (W)	2,900 (755 ~2,950)
MCA: Min. circuit amps (A)	**MOCP**: Max. over current protection (A)
RLA: Rated load amps (A)	**W:** Fan motor rated output (W)

PERFORMANCE of Cooling	
Cooling (Btu/hr)	
Rated Capacity	30,000
Min/Max Capacity	6,800~34,000
Moisture Removal(L/h)	3.6
Standard Operating Range(°F/°C)	-13~122 (-25 ~ 50)
Conditions:	Indoor: 80°F DB/67°F WB
	Outdoor: 95°F DB/75°F WB

PERFORMANCE of Heating	
Heating (Btu/hr)	
1. @ 47°F Rated	30,000
1. @ 47°F Min/Max Capacity	12,300~32,200
2. @ 17°F Rated	20,000
3. @ 5°F Rated: Capacity / COP	20,000 / 1.94
3. @ 5°F Max: Capacity	20,000
Standard Operating Range(°F/°C)	-13~75 (-25 ~ 24)
1. Conditions:	Indoor: 70°F DB/60°F WB
	Outdoor: 47°F DB/43°F WB
2. Conditions:	Indoor: 70°F DB/60°F WB
	Outdoor: 17°F DB/15°F WB
3. Conditions	Indoor: 70°F DB/60°F WB
	Outdoor: 5°F DB/5°F WB

PIPING	
Throttle type(Indoor)	N/A
Throttle type(Outdoor)	EXV+Capillary
Liquid Size	3/8" (9.52mm)
Gas Size	5/8" (15.9mm)
Max. Piping Length(ft/m)	164 (50)
Max. Height Difference(ft/m)	82 (25)
Max. Pre-charged Length(ft/m)	25 (7.5)
Refrigerant Pre-charged Amount(oz/g)	85 (2.4)
Additional Charge of Refrigerant((oz/ft)/(g/r	0.32 (30)
Connection Method	Flared

Indoor Unit Dimension

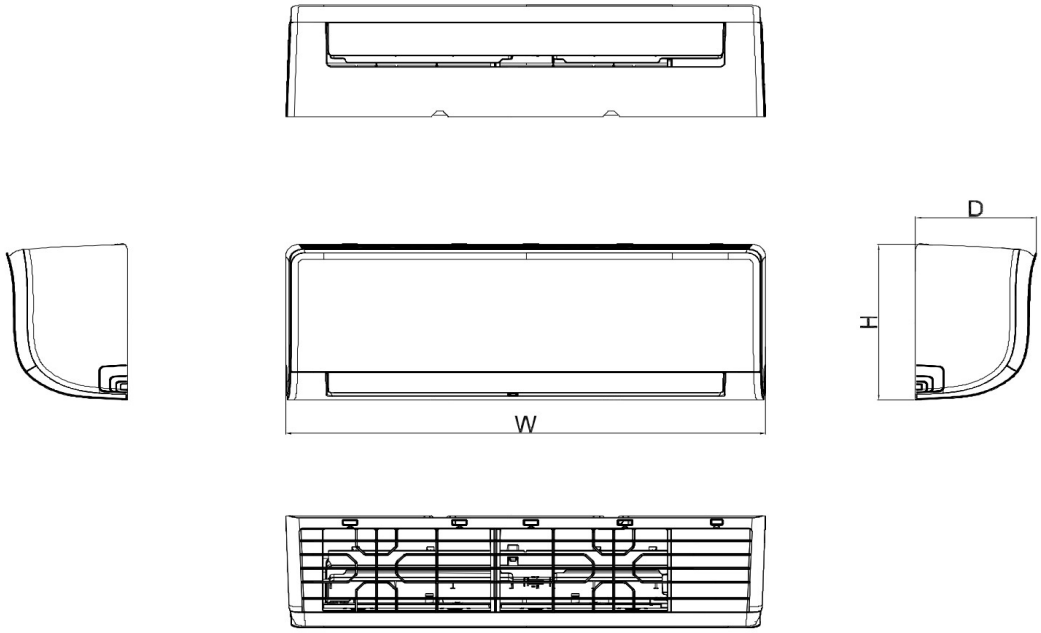

Capacity	Body Code	Unit	W	D	H
9k	A	mm	726	210	291
		inch	28-5/8	8-1/4	11-1/2
12k	B	mm	835	208	295
		inch	32-7/8	8-1/4	11-5/8
18k	C	mm	969	241	320
		inch	38-1/8	9-1/2	12-5/8
24k	D	mm	1083	244	336
		inch	42-5/8	9-5/8	13-1/4
30k~36k	F	mm	1259	283	362
		inch	49-5/8	11-1/8	14-1/4

Installation Instruction

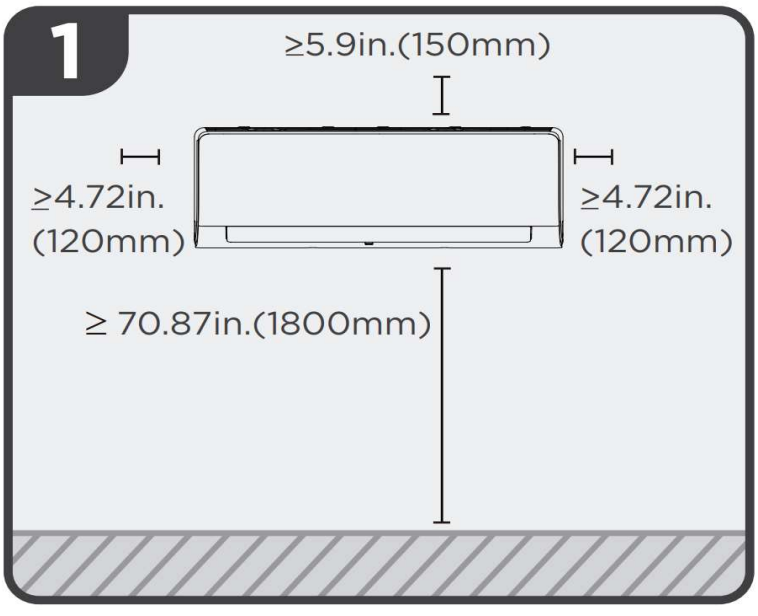

Select Installation Location

Outdoor Unit Dimension

Unit: inch (mm)

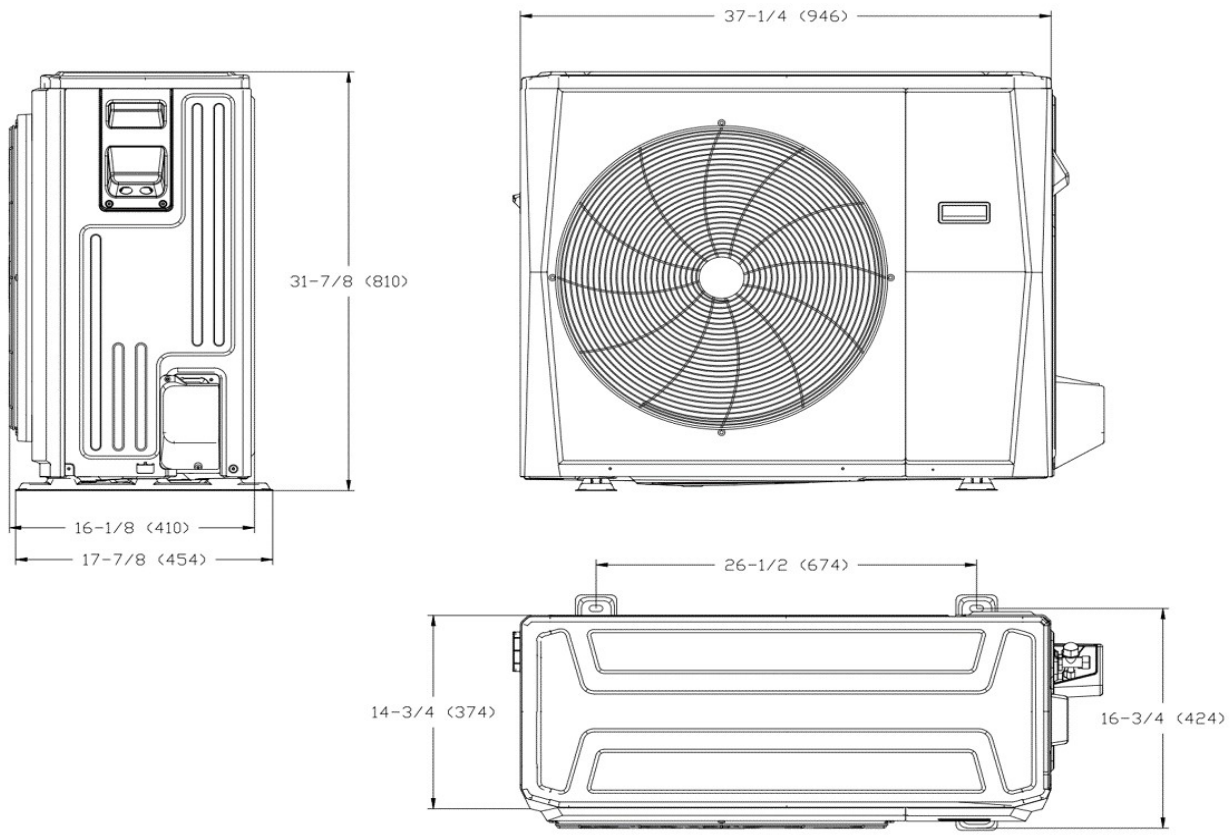

Installation Instruction

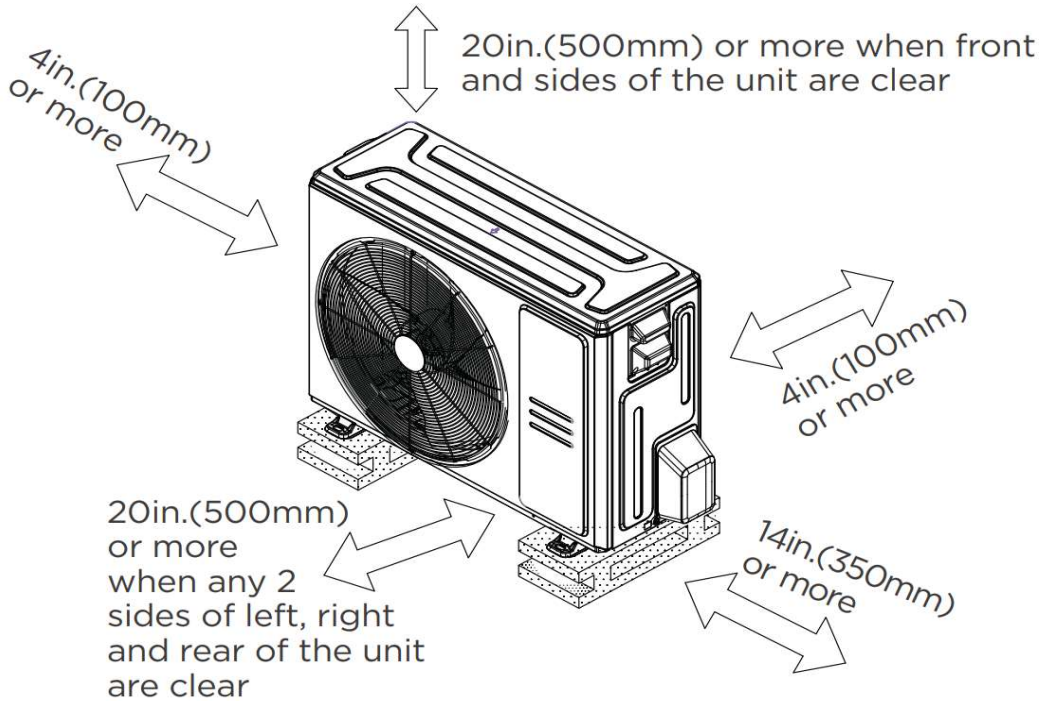

FEATURES

- Indoor unit: TU1 copper coil
- 1~100% fan speed setting
- WiFi capability: through WiFi dongle or wired controller with built-in Wi-Fi
- OTA(by using Wi-Fi dongle)
- Multiple control options available:
  - Two-way communication wired controller with built-in Wi-Fi:120N(X6W)
  - Midea Smart Thermostat : MTL04-1
  - Wireless remote controller RG10 (Built-In)
  - Third-Party 24V Thermostat*

*Midea 24V Mini Interface Kit (17222000A68532) is required.